MISSOURI RIVER BRIDGE AT PLATTSMOUTH

PROJECT NUMBER	SHEET NO.
34-7 (122)	

C.N. 22246

STRUCTURE NUMBER

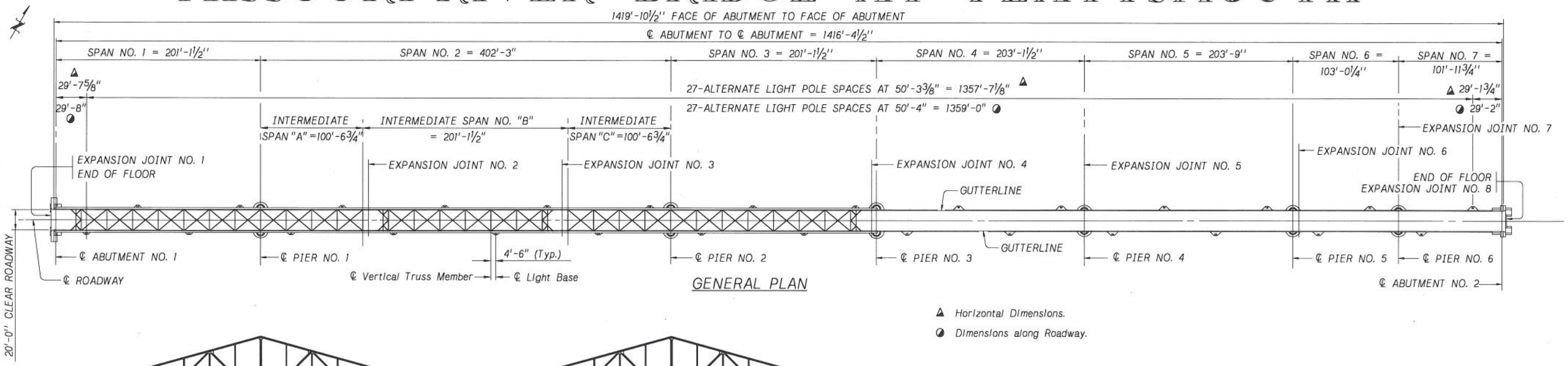

GENERAL PLAN

▲ Horizontal Dimensions.

◑ Dimensions along Roadway.

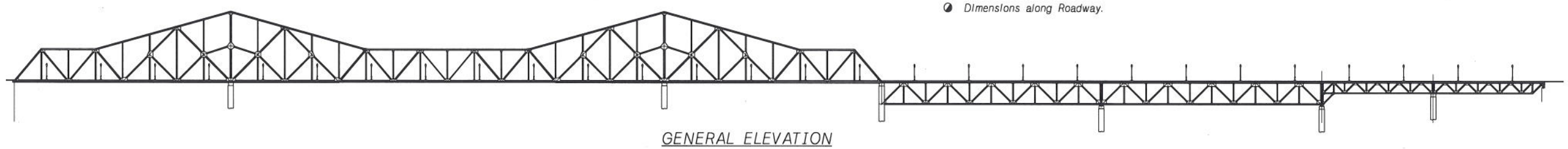

GENERAL ELEVATION

NOTES

BEFORE ORDERING ANY MATERIALS, THE CONTRACTOR SHALL MAKE A DETAILED FIELD INSPECTION OF THE EXISTING STRUCTURE, VERIFYING ALL DIMENSIONS AND REPORTING TO THE ENGINEER ANY DISCREPANCIES BETWEEN HIS MEASUREMENTS AND THOSE SHOWN ON THE PLANS.

THE ITEM "PREPARATION OF BRIDGE AT R.P. 38208" CONSISTS OF REMOVING EXISTING EXPANSION JOINTS, REMOVING EXISTING S8x18.4 DECK BEAMS, REMOVING STEEL RAILING AND RAIL SUPPORTS, AND REMOVING SLAB AND CURBS AS SHOWN ON ON THESE PLANS. THIS ITEM SHALL BE PAID FOR AT THE CONTRACT UNIT PRICE, PER ONE EACH.

ALL PREPARATION, MATERIALS, EQUIPMENT, TOOLS, LABOR AND INCIDENTALS NECESSARY TO COMPLETE THIS WORK THAT ARE NOT PAID FOR DIRECTLY, SHALL BE CONSIDERED SUBSIDIARY TO THE ITEMS FOR WHICH PAYMENT IS MADE.

ADDITIONAL REPAIRS SHOULD ONLY BE APPLIED IF THE CONDITIONS WARRENT THEM. THE PROJECT ENGINEER IS RESPONSIBLE FOR DETERMINING THE NEED FOR SUCH REPAIRS.

ALL MATERIALS REMOVED SHALL BECOME THE PROPERTY OF THE CONTRACTOR AND SHALL BE REMOVED FROM THE PROJECT SITE.

ALL CONCRETE SHALL BE CLASS 47BD-4000.

ALL CONCRETE SURFACES TO BE IN CONTACT WITH THE NEW WORK SHALL BE THOROUGHLY CLEANED, BEFORE PLACING NEW CONCRETE OR EXPANSION JOINTS

THE MINIMUM COVERING, MEASURED FROM THE FACE OF THE CONCRETE TO THE SURFACE OF ANY REINFORCING BAR, SHALL BE 2" EXCEPT AS SHOWN.

CHAMFER ALL EXPOSED EDGES OF CONCRETE.

THE NEW EXPANSION JOINT SHALL BE POLYTITE PRECOMPRESSED SELF -EXPANDING POLYURETHANE FOAM JOINT SEALER, OR AN APPROVED EQUAL.

ALL REINFORCING STEEL USED SHALL CONFORM TO THE REQUIREMENTS OF A.S.T.M. DESIGNATION A615/A615M, GRADE 60.

FIELD BEND OR CLIP REINFORCING BARS TO MAINTAIN MINIMUM CLEARANCE.

ALL STRUCTURAL STEEL SHALL CONFORM TO THE REQUIREMENTS OF A.S.T.M. A709 GRADE 36.

QUANTITIES

PREPARATION OF BRIDGE AT R.P. 382.08	1	EACH
CLASS 47BD-4000 CONCRETE FOR BRIDGE	972.5	CU. YDS.
EPOXY COATED REINFORCING STEEL	290,850	POUNDS
STRUCTURAL STEEL FOR BRIDGE	15,735	POUNDS
FLOOR DRAINS	56	EACH
PRECOMPRESSED POLYURETHANE FOAM JOINT	176.0	LIN. FT.
SHEAR CONNECTORS	363	EACH
1½" ELECTRICAL CONDUIT	2,970	LIN. FT.

THE LOCATIONS OF ALL AERIAL AND UNDERGROUND UTILITY FACILITIES MAY NOT BE INDICATED IN THESE PLANS. UNDERGROUND UTILITIES, WHETHER INDICATED OR NOT WILL BE LOCATED AND FLAGGED BY THE UTILITIES AT THE REQUEST OF THE CONTRACTOR.

NO EXCAVATION WILL BE PERMITTED IN THE AREA OF UNDERGROUND UTILITY FACILITIES UNTIL ALL SUCH FACILITIES HAVE BEEN LOCATED AND IDENTIFIED TO THE SATISFACTION OF ALL PARTIES. THE EXCAVATION MUST BE ACCOMPLISHED WITH EXTREME CARE IN ORDER TO AVOID ANY POSSIBILITY OF DAMAGE TO THE UTILITY FACILITY.

INDEX

FRONT SHEET	1
PLAN AND ELEVATION SPAN NO. 1	2
PLAN AND ELEVATION SPAN NO. 2	3
PLAN AND ELEVATION SPAN NO. 3	4
PLAN AND ELEVATION SPAN NO. 4	5
PLAN AND ELEVATION SPAN NO. 5	6
PLAN AND ELEVATION SPAN NO. 6	7
PLAN AND ELEVATION SPAN NO. 7	8
PLAN AND ELEVATION SPAN NO. 8	9
PLAN AND ELEVATION SPAN NO. 9	10
BEAM AND STRINGER REPLACEMENT SCHEDULE AND ABUTMENT REHAB DETAILS	11
SLAB REINFORCING LAYOUTS	12
SLAB CROSS SECTIONS	13
WING ELEVATIONS	14
EXPANSION JOINT DETAILS	15
FLOOR DRAINS	16
LIGHT POLE BASES	17
LIGHTING DETAILS	18
BILL OF BARS	19

PROFESSIONAL STRUCTURAL ENGINEER — LYMAN D. FREEMON E-2005 — STATE OF NEBRASKA

BRIDGE ENGINEER

1416'-4½" 9-SPAN TRUSS BRIDGE - REDECK AND REHAB

FRONT SHEET

MISSOURI RIVER BRIDGE AT PLATTSMOUTH

LOCATION
SKEW 0°
ROADWAY 20'-0"
DESIGN LIVE LOAD

COUNTY CASS
HWY. NO. U.S. 34
REF. POST.
STA.

DATE

CHECKED BY

DETAILED BY

DESIGNED BY

STATE OF NEBRASKA - DEPARTMENT OF ROADS - BRIDGE DIVISION

Nebraska

SPECIAL PLAN NO.

plattsmouth3.dgn

Sheet A

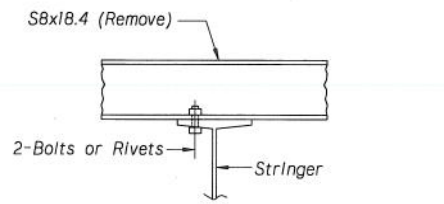

EXISTING DECK BEAM ATTACHMENT
(Typical)

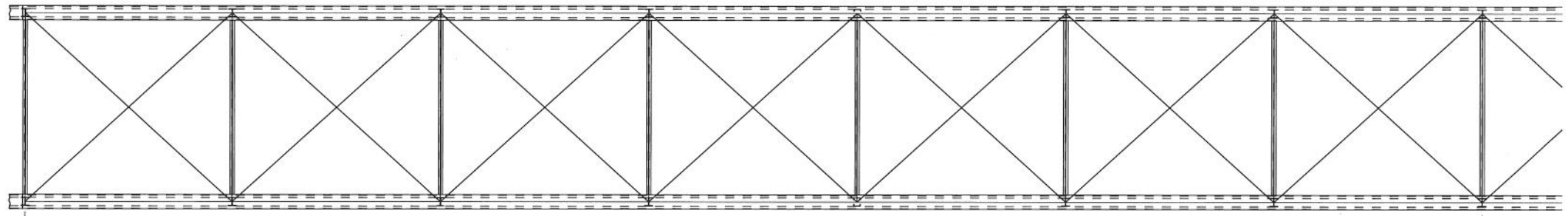

SPAN NO. 1 TRUSS TOP FRAMING PLAN

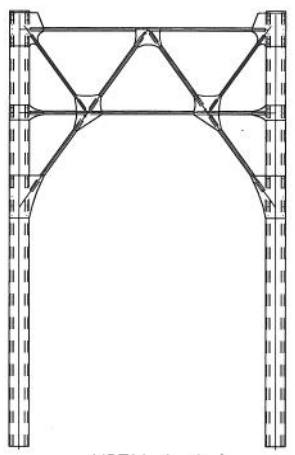

VIEW A-A

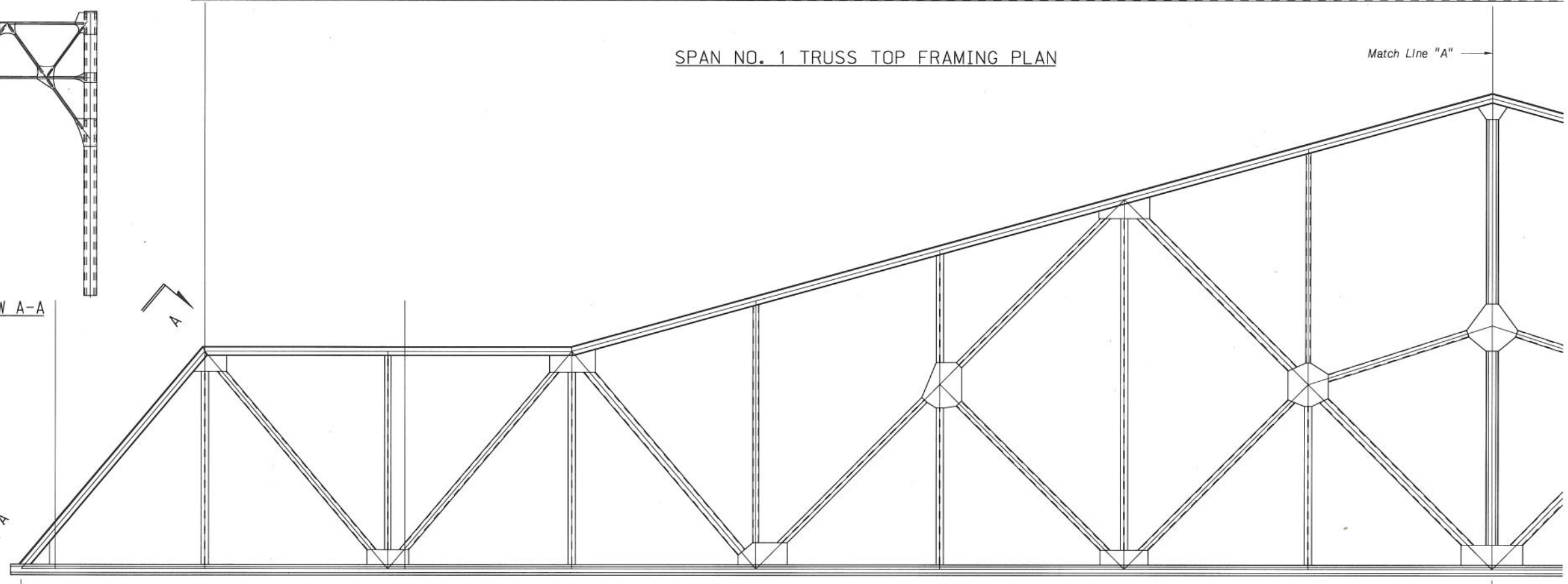

SPAN NO. 1 TRUSS ELEVATION

○ = Location Area

Notes:
All Members Shown are Existing.
See Sheet 11 of 19 for those Members to be Replaced.

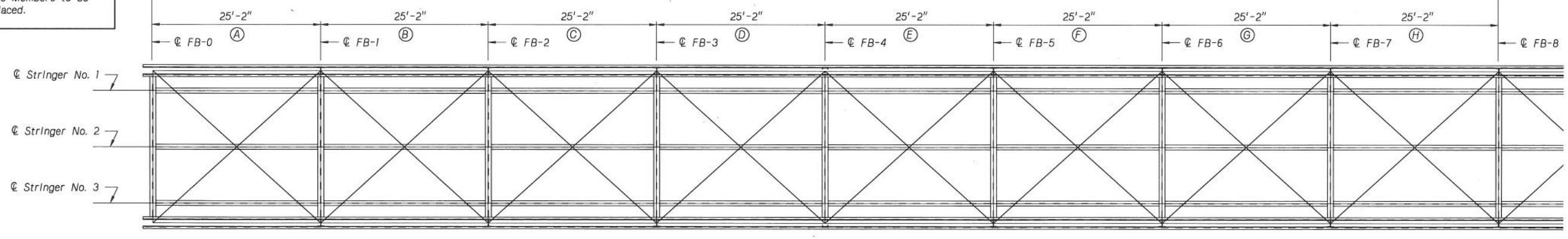

* SPAN NO. 1 DECK LAYOUT PLAN

* 72-S8x18.4 Deck Beams at about 3'-0"ctrs. to be removed. (Not shown on plan)

PROJECT NUMBER	SHEET NO.
34-7 (122)	

C.N. 22246
STRUCTURE NUMBER

PROFESSIONAL STRUCTURAL ENGINEER
LYMAN D. FREEMON
E-2005
STATE OF NEBRASKA

BRIDGE ENGINEER

1416'-4½" 9-SPAN TRUSS
BRIDGE - REDECK AND REHAB
PLAN & ELEVATION SPAN NO. 1

DATE

LOCATION MISSOURI RIVER BRIDGE AT PLATTSMOUTH
SKEW 0°
ROADWAY 20'-0"
DESIGN LIVE LOAD

DESIGNED BY | DETAILED BY | CHECKED BY

COUNTY CASS
HWY. NO. U.S. 34
REF. POST.
STA.

STATE OF NEBRASKA - DEPARTMENT OF ROADS - BRIDGE DIVISION

Nebraska

SPECIAL PLAN NO. 2/19

plattsmouth3.dgn

Sheet B

PROJECT NUMBER	SHEET NO.
34-7 (122)	

C.N. 22246

STRUCTURE NUMBER

PROFESSIONAL STRUCTURAL ENGINEER
LYMAN D. FREEMON
E-2005
STATE OF NEBRASKA

BRIDGE ENGINEER

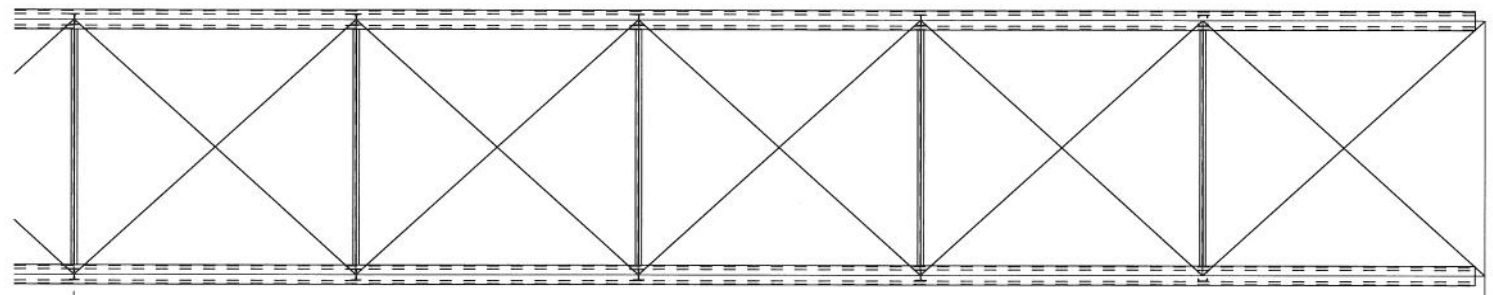

Match Line "A" — INTERMEDIATE SPAN "A" TRUSS TOP FRAMING PLAN — Match Line "B"

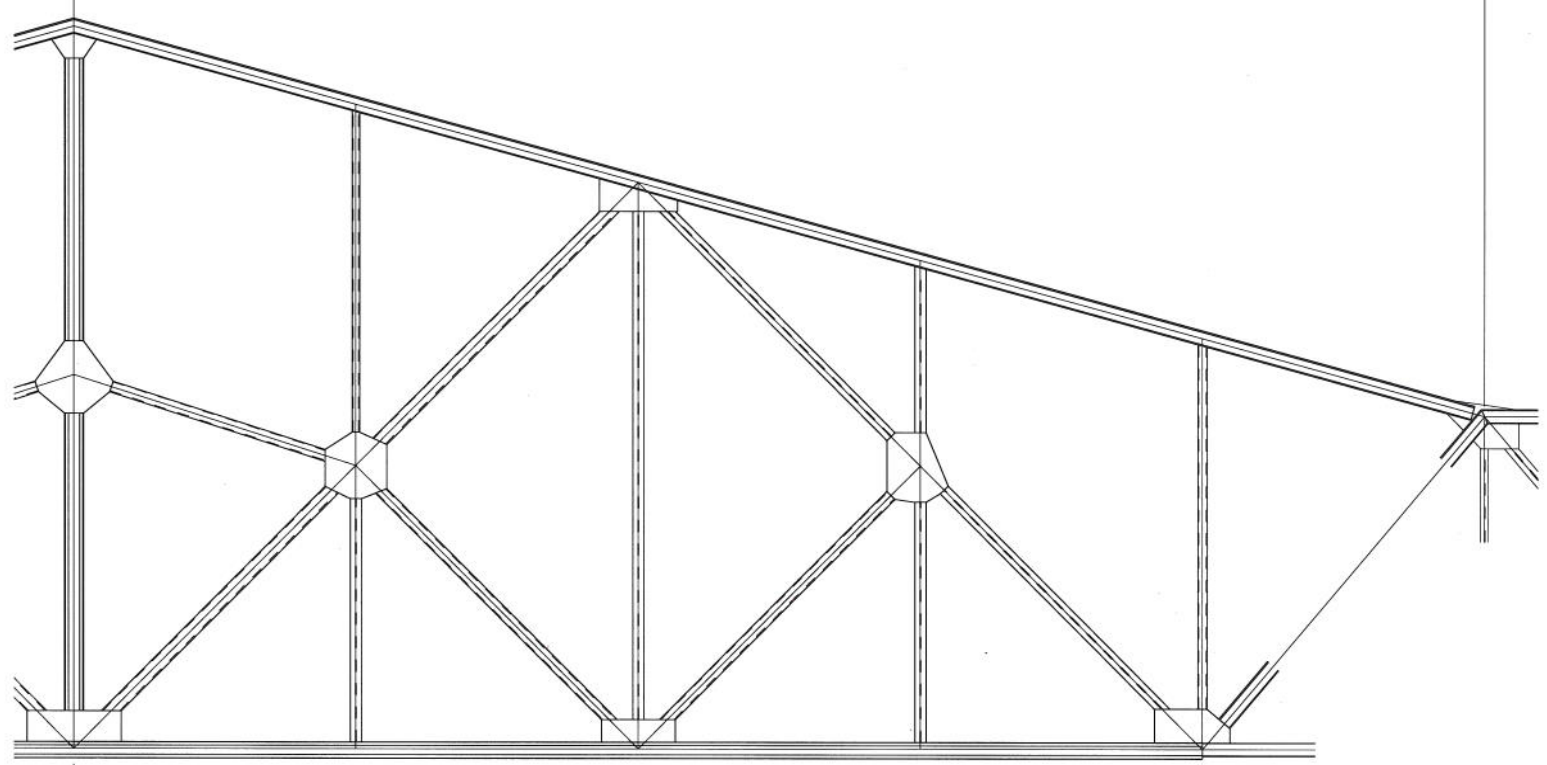

INTERMEDIATE SPAN "A" TRUSS ELEVATION

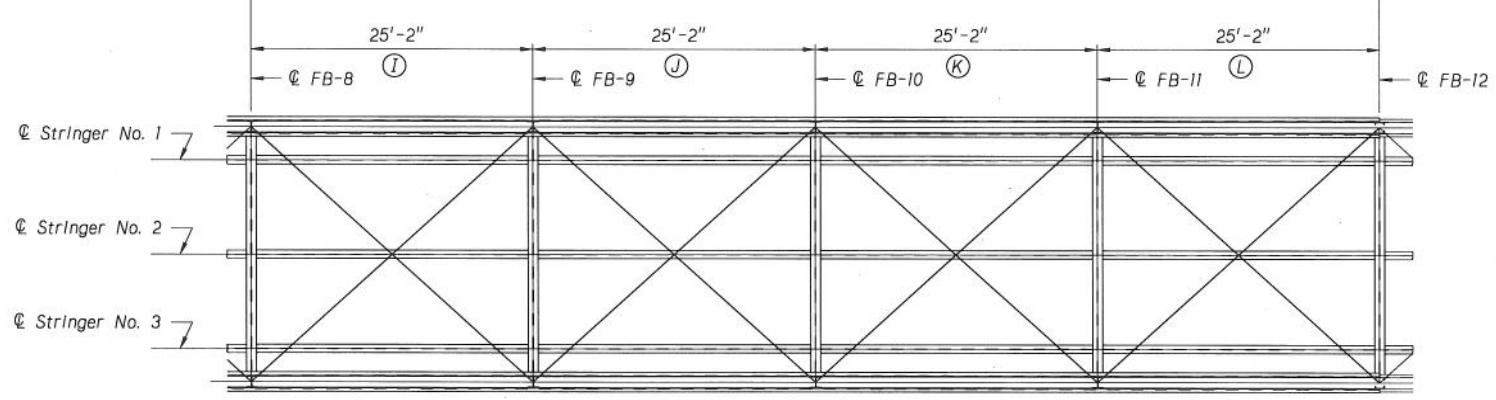

* INTERMEDIATE SPAN "A" DECK LAYOUT PLAN

* 36-S8x18.4 Deck Beams at about 3'-0"ctrs. to be removed. (Not shown on plan)

◯ = Location Area

Notes:
All Members Shown are Existing.
See Sheet 11 of 19 for those Members to be Replaced.

1416'-4½" 9-SPAN TRUSS
BRIDGE - REDECK AND REHAB
PLAN & ELEVATION SPAN NO. 2

LOCATION MISSOURI RIVER BRIDGE AT PLATTSMOUTH
SKEW 0°
ROADWAY 20'-0"
DESIGN LIVE LOAD

COUNTY CASS
HWY. NO. U.S. 34
REF. POST.
STA.

DESIGNED BY | DETAILED BY | CHECKED BY | DATE

STATE OF NEBRASKA - DEPARTMENT OF ROADS - BRIDGE DIVISION

Nebraska

SPECIAL PLAN NO. 3/19

plattsmouth3.dgn

Sheet C

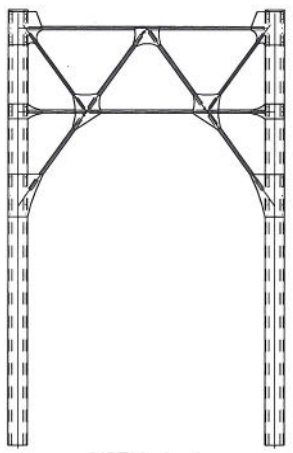

VIEW A-A

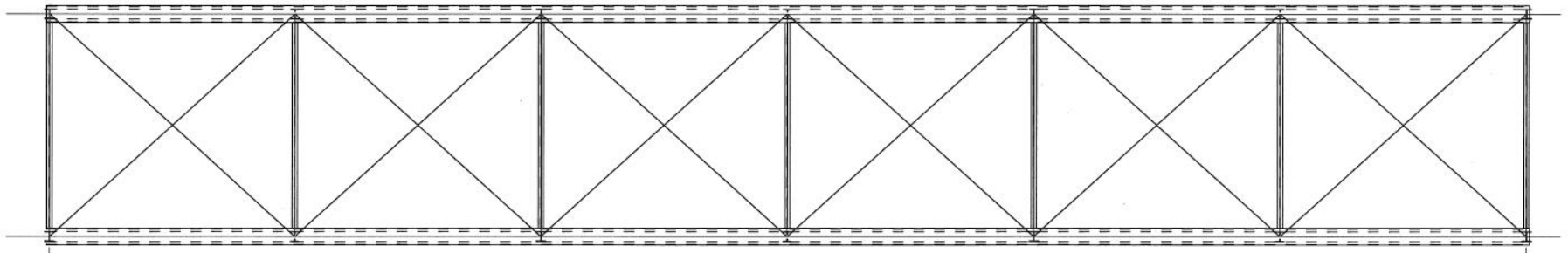

INTERMEDIATE SPAN "B" TRUSS TOP FRAMING PLAN

Match Line "B"

◯ = Location Area

Notes:
All Members Shown are Existing.
See Sheet 11 of 19 for those Members to be Replaced.

Match Line "C"

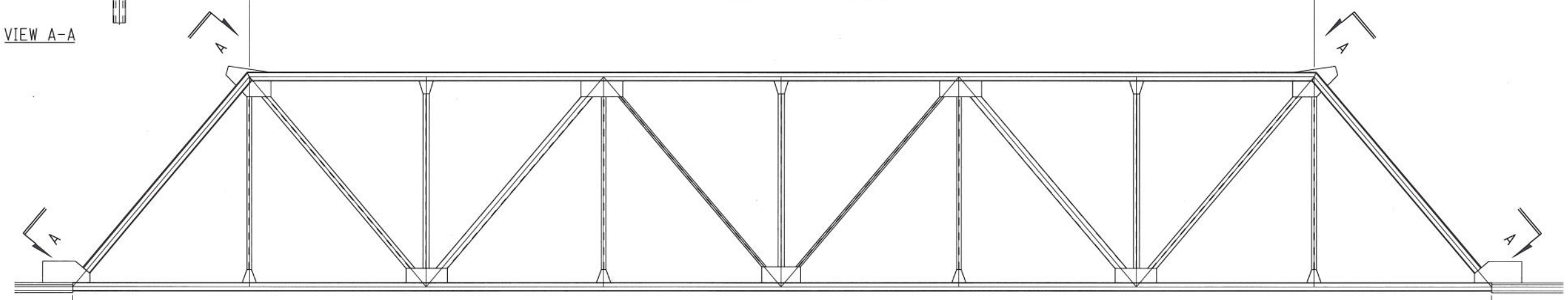

INTERMEDIATE SPAN "B" TRUSS ELEVATION

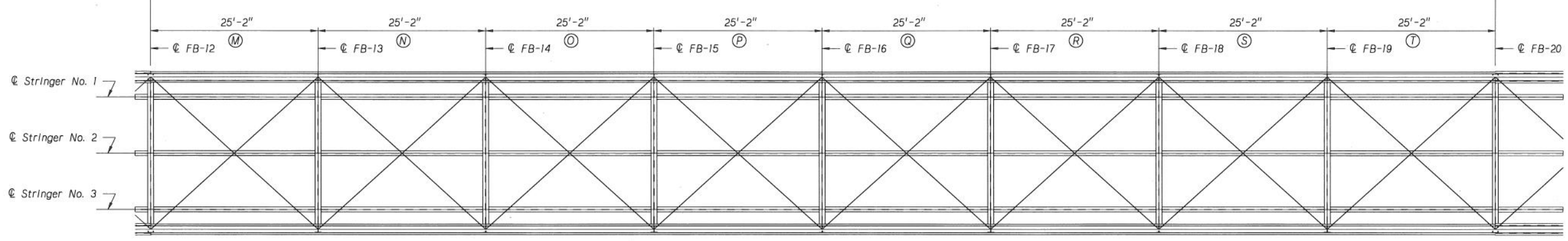

* INTERMEDIATE SPAN "B" DECK LAYOUT PLAN

* 72-S8x18.4 Deck Beams at about 3'-0"ctrs. to be removed. (Not shown on plan)

PROJECT NUMBER	SHEET NO.
34-7 (122)	

C.N. 22246

STRUCTURE NUMBER

PROFESSIONAL STRUCTURAL ENGINEER
LYMAN D. FREEMON
E-2005
STATE OF NEBRASKA

BRIDGE ENGINEER

1416'-4½" 9-SPAN TRUSS
BRIDGE - REDECK AND REHAB
PLAN & ELEVATION SPAN NO. 3

LOCATION MISSOURI RIVER BRIDGE AT PLATTSMOUTH
SKEW 0°
ROADWAY 20'-0"
DESIGN LIVE LOAD

COUNTY CASS
HWY. NO. U.S. 34
REF. POST.
STA.

DESIGNED BY | DETAILED BY | CHECKED BY | DATE

STATE OF NEBRASKA - DEPARTMENT OF ROADS - BRIDGE DIVISION

Nebraska

SPECIAL PLAN NO. 4/19

plattsmouth3.dgn

Sheet D

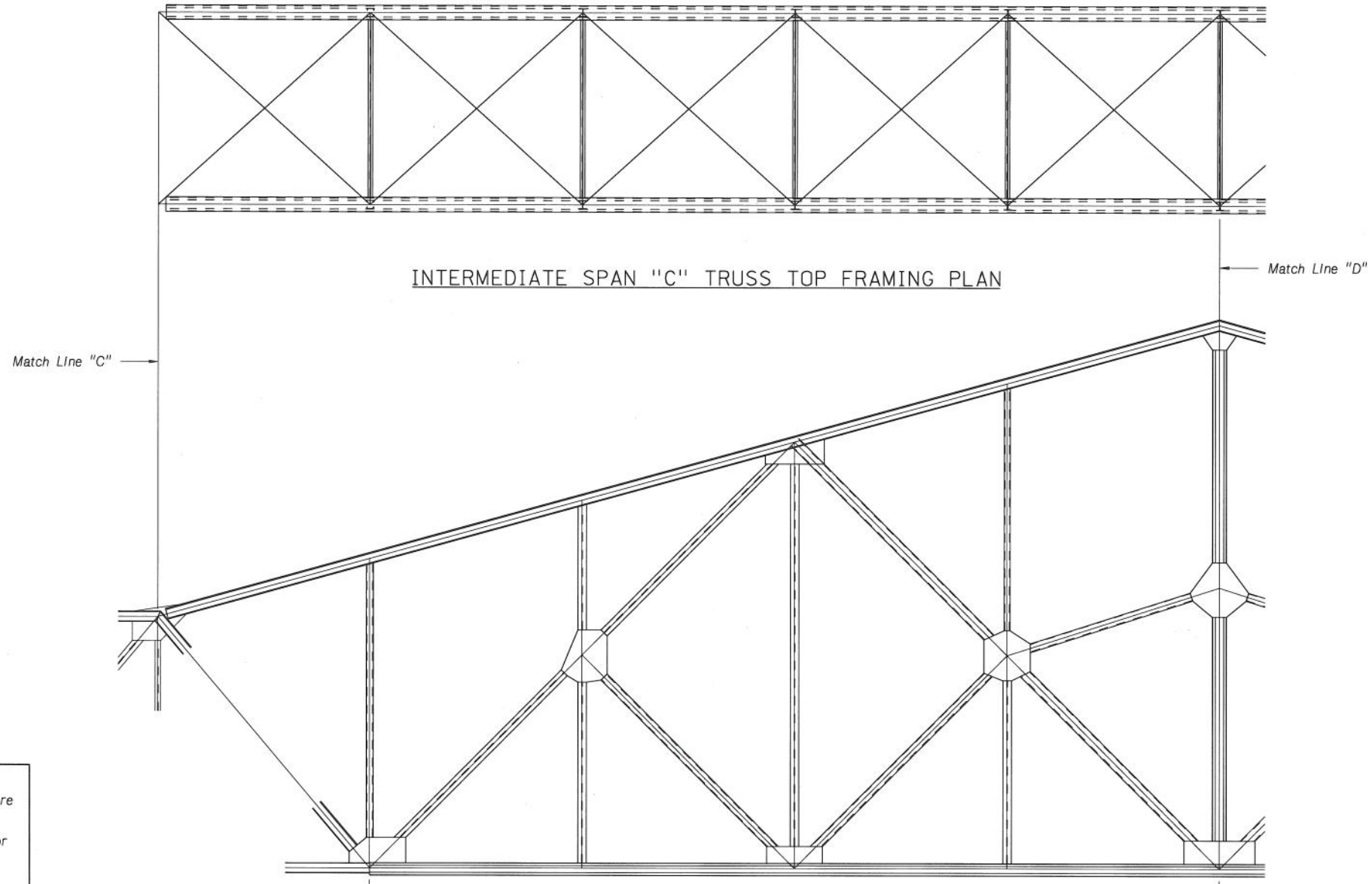

INTERMEDIATE SPAN "C" TRUSS TOP FRAMING PLAN

◯ = Location Area

Notes:
All Members Shown are Existing.
See Sheet 11 of 19 for those Members to be Replaced.

INTERMEDIATE SPAN "C" TRUSS ELEVATION

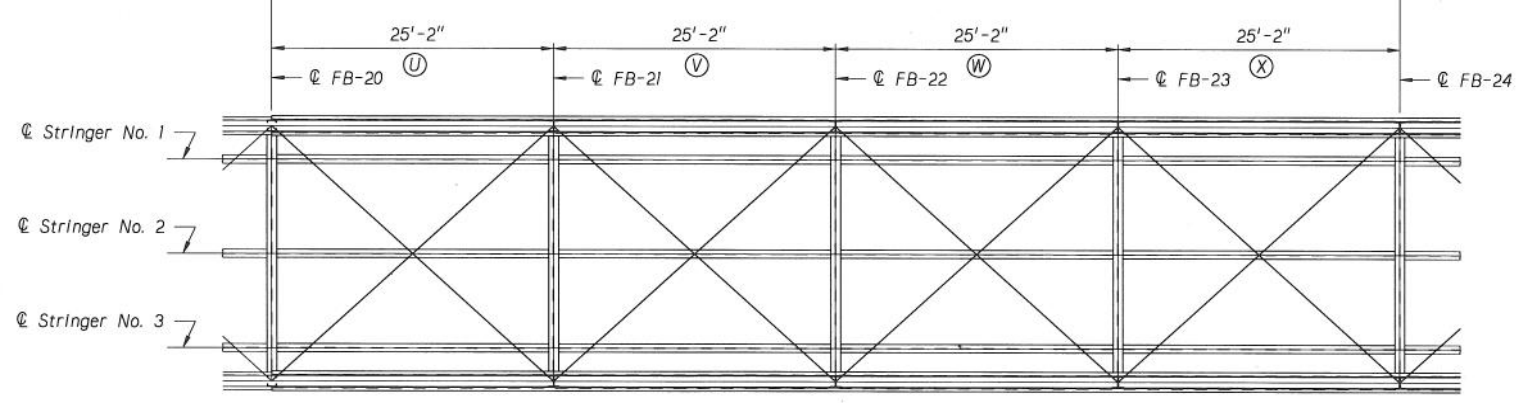

* INTERMEDIATE SPAN "C' DECK LAYOUT PLAN

* 36-S8x18.4 Deck Beams at about 3'-0"ctrs. to be removed. (Not shown on plan)

PROJECT NUMBER	SHEET NO.
34-7 (122)	

C.N. 22246

STRUCTURE NUMBER

PROFESSIONAL STRUCTURAL ENGINEER
LYMAN D. FREEMON
E-2005
STATE OF NEBRASKA

BRIDGE ENGINEER

1416'-4½" 9-SPAN TRUSS
BRIDGE - REDECK AND REHAB
PLAN & ELEVATION SPAN NO. 4

LOCATION MISSOURI RIVER BRIDGE AT PLATTSMOUTH
SKEW 0°
ROADWAY 20'-0"
DESIGN LIVE LOAD

CHECKED BY
DATE
DETAILED BY
DESIGNED BY

COUNTY CASS
HWY. NO. U.S. 34
REF. POST.
STA.

STATE OF NEBRASKA - DEPARTMENT OF ROADS - BRIDGE DIVISION

Nebraska

SPECIAL PLAN NO. 5/19

plattsmouth3.dgn

Sheet E

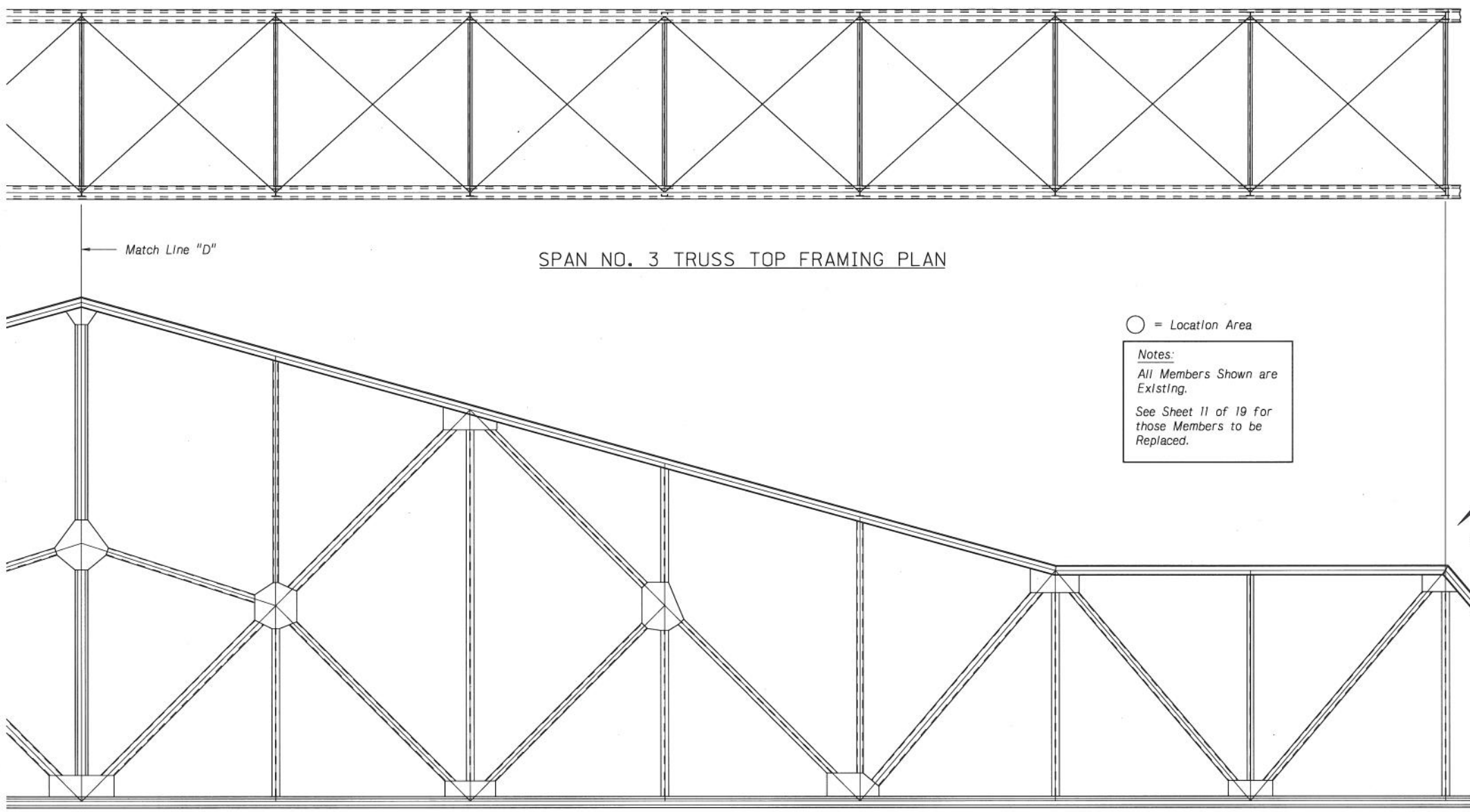

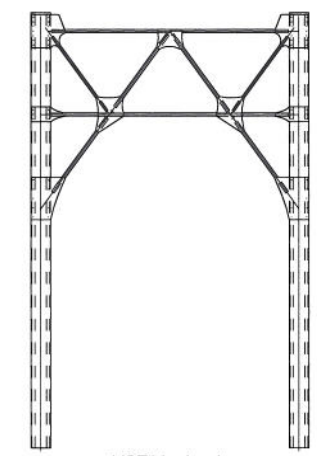

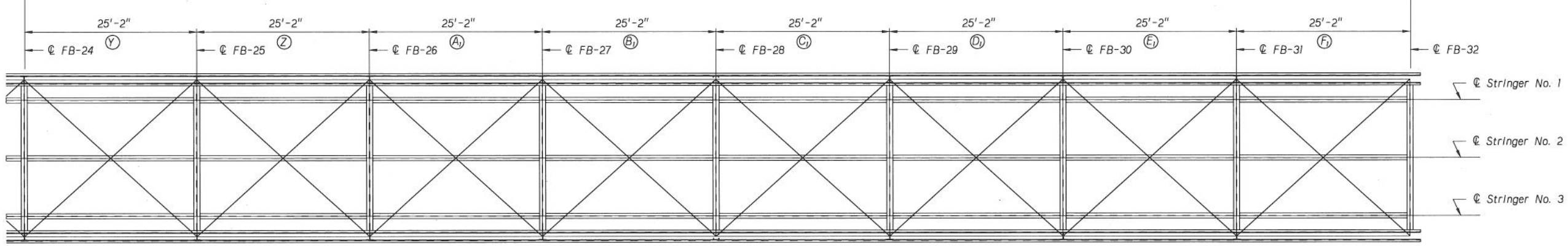

* SPAN NO. 3 DECK LAYOUT PLAN

* 72-S8x18.4 Deck Beams at about 3'-0"ctrs. to be removed. (Not shown on plan)

PROJECT NUMBER	SHEET NO.
34-7 (122)	

C.N. 22246

STRUCTURE NUMBER

PROFESSIONAL STRUCTURAL ENGINEER
LYMAN D. FREEMON
E-2005
STATE OF NEBRASKA

BRIDGE ENGINEER

1416'-4½" 9-SPAN TRUSS
BRIDGE - REDECK AND REHAB
PLAN & ELEVATION SPAN NO. 5

LOCATION MISSOURI RIVER BRIDGE AT PLATTSMOUTH
SKEW 0°
ROADWAY 20'-0"
DESIGN LIVE LOAD

COUNTY CASS
HWY. NO. U.S. 34
REF. POST.
STA.

DESIGNED BY | DETAILED BY | CHECKED BY | DATE

STATE OF NEBRASKA - DEPARTMENT OF ROADS - BRIDGE DIVISION

Nebraska

SPECIAL PLAN NO. 6/19

plattsmouth3.dgn

Sheet F

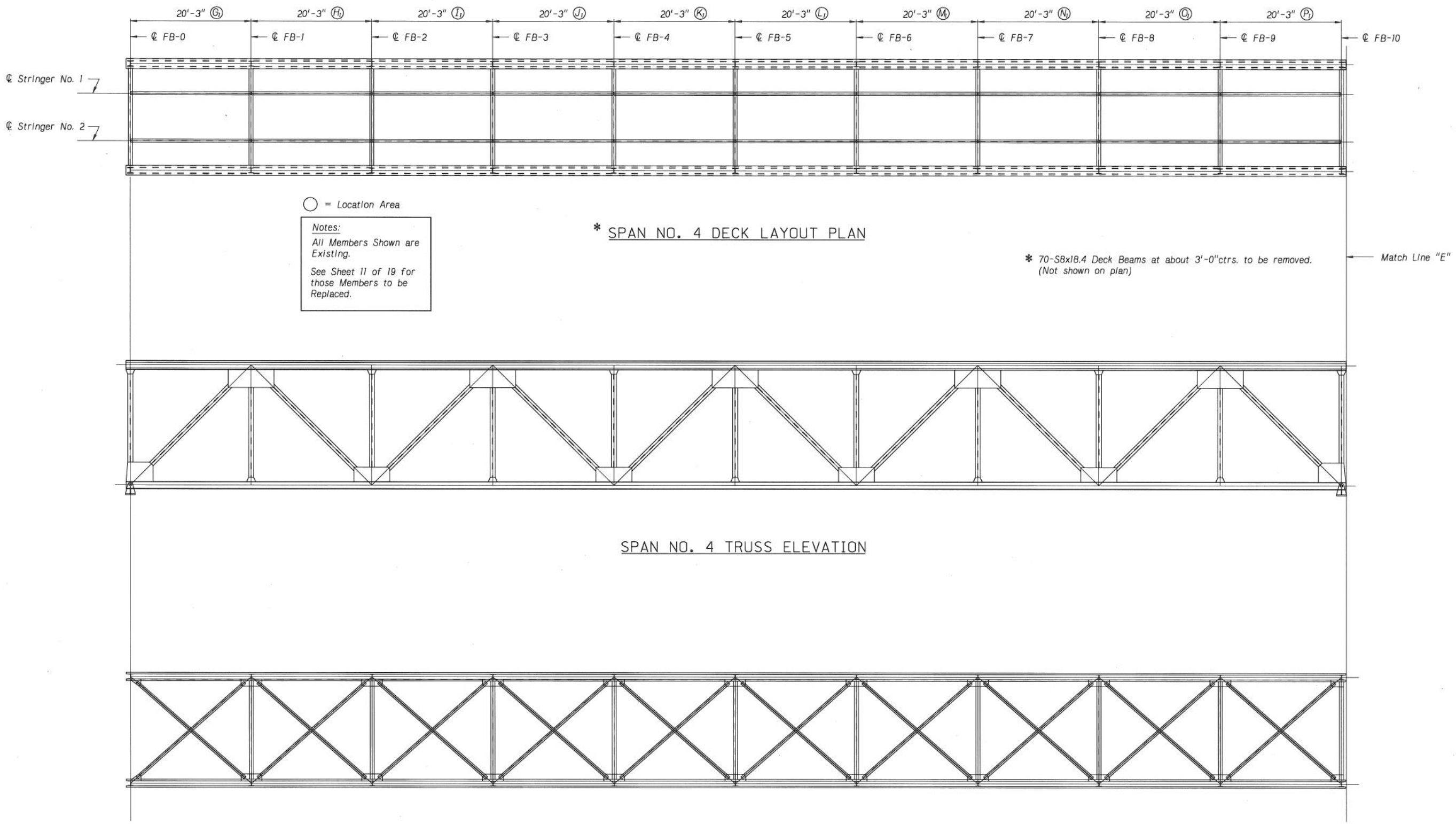

PROJECT NUMBER	SHEET NO.
34-7 (122)	

C.N. 22246

STRUCTURE NUMBER

PROFESSIONAL STRUCTURAL ENGINEER
LYMAN D. FREEMON
E-2005
STATE OF NEBRASKA

BRIDGE ENGINEER

1416'-4 1/2" 9-SPAN TRUSS
BRIDGE - REDECK AND REHAB
PLAN & ELEVATION SPAN NO. 6

DATE

CHECKED BY

DETAILED BY

DESIGNED BY

LOCATION MISSOURI RIVER BRIDGE AT PLATTSMOUTH
SKEW 0°
ROADWAY 20'-0"
DESIGN LIVE LOAD

COUNTY CASS
HWY. NO. U.S. 34
REF. POST.
STA.

STATE OF NEBRASKA - DEPARTMENT OF ROADS - BRIDGE DIVISION

Nebraska

SPECIAL PLAN NO. 7/19

plattsmouth3.dgn

Sheet D

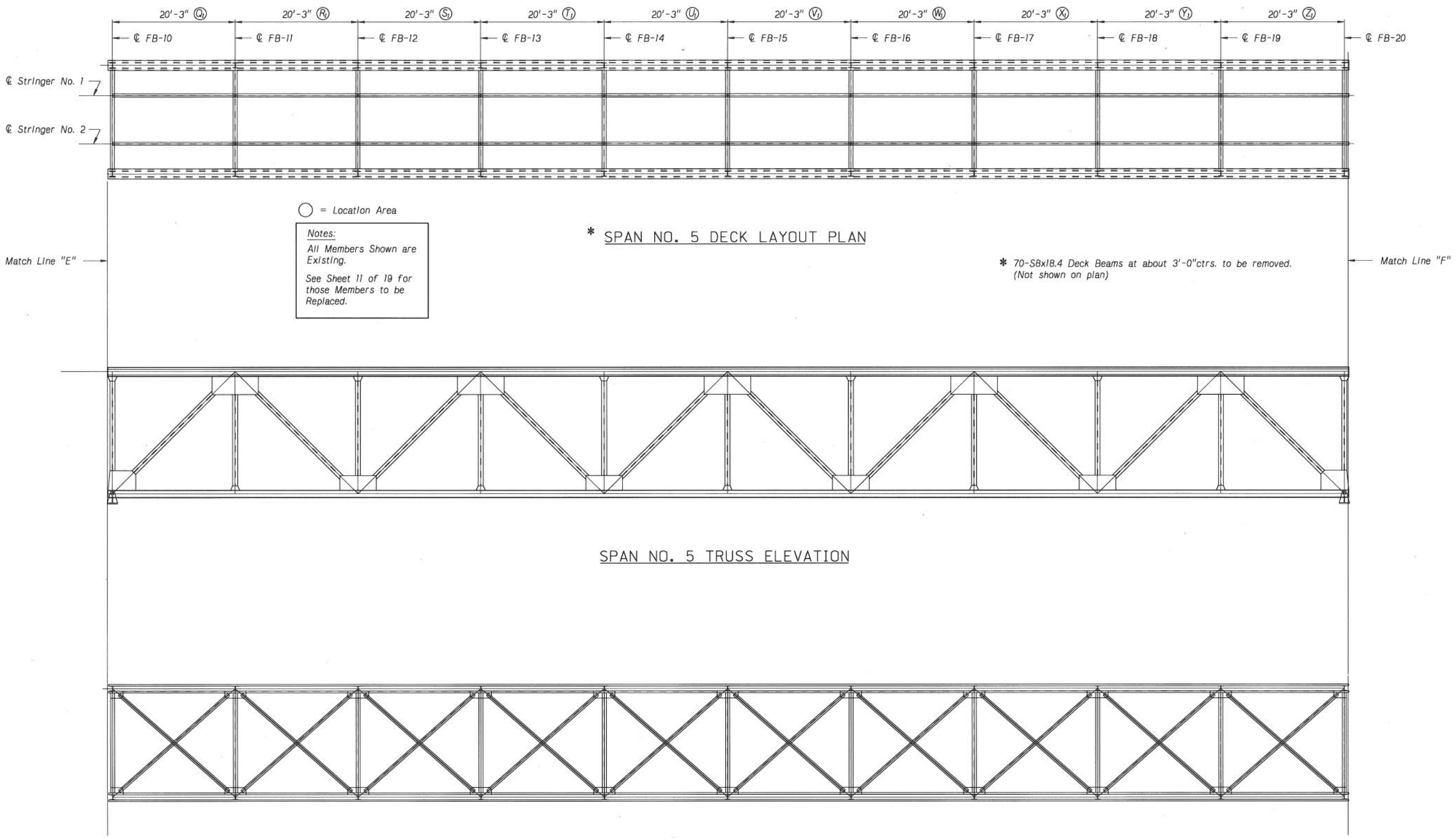

PROJECT NUMBER	SHEET NO.
34-7 (122)	

C.N. 22246

STRUCTURE NUMBER

PROFESSIONAL STRUCTURAL ENGINEER
LYMAN D. FREEMON
E-2005
STATE OF NEBRASKA

BRIDGE ENGINEER

1416'-4 1/2" 9-SPAN TRUSS
BRIDGE - REDECK AND REHAB
PLAN & ELEVATION SPAN NO. 7

LOCATION MISSOURI RIVER BRIDGE AT PLATTSMOUTH
SKEW 0°
ROADWAY 20'-0"
DESIGN LIVE LOAD

COUNTY CASS
HWY. NO. U.S. 34
REF. POST.
STA.

DESIGNED BY
DETAILED BY
CHECKED BY
DATE

STATE OF NEBRASKA - DEPARTMENT OF ROADS - BRIDGE DIVISION

Nebraska

SPECIAL PLAN NO. 8/19

plattsmouth3.dgn

Sheet E

◯ = Location Area

Notes:

All Members Shown are Existing.

See Sheet 11 of 19 for those Members to be Replaced.

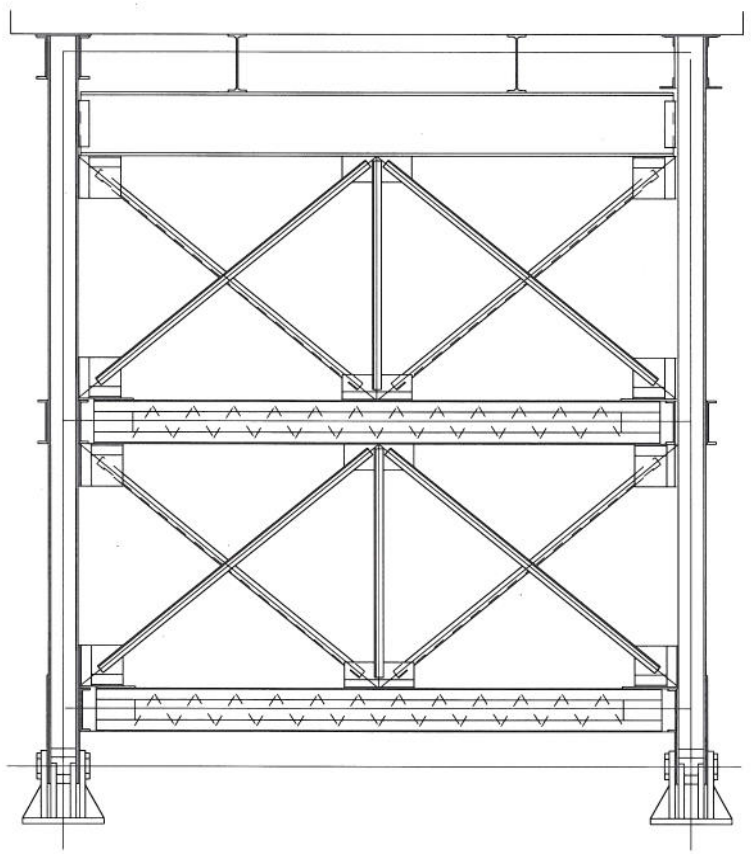

VIEW A-A

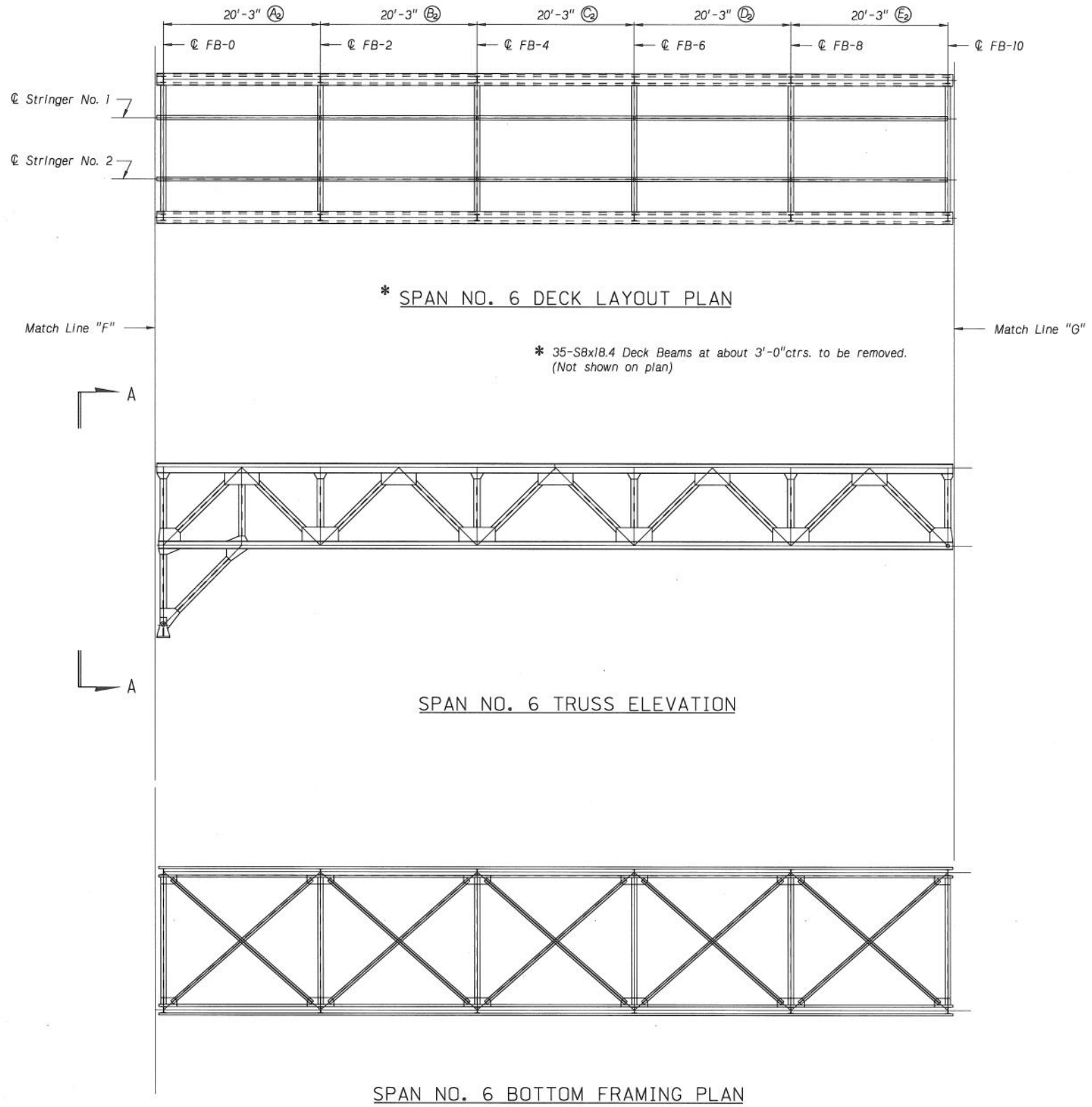

* SPAN NO. 6 DECK LAYOUT PLAN

* 35-S8x18.4 Deck Beams at about 3'-0"ctrs. to be removed. (Not shown on plan)

SPAN NO. 6 TRUSS ELEVATION

SPAN NO. 6 BOTTOM FRAMING PLAN

plattsmouth3.dgn

Sheet F

PROJECT NUMBER	SHEET NO.
34-7 (122)	

C.N. 22246

STRUCTURE NUMBER

PROFESSIONAL STRUCTURAL ENGINEER LYMAN D. FREEMON E-2005 STATE OF NEBRASKA

BRIDGE ENGINEER

1416'-4 1/2" 9-SPAN TRUSS
BRIDGE - REDECK AND REHAB
PLAN & ELEVATION SPAN NO. 8

LOCATION MISSOURI RIVER BRIDGE AT PLATTSMOUTH
SKEW 0°
ROADWAY 20'-0"
DESIGN LIVE LOAD

COUNTY CASS
HWY. NO. U.S. 34
REF. POST.
STA.

DESIGNED BY | DETAILED BY | CHECKED BY | DATE

STATE OF NEBRASKA - DEPARTMENT OF ROADS - BRIDGE DIVISION

Nebraska

SPECIAL PLAN NO. 9/19

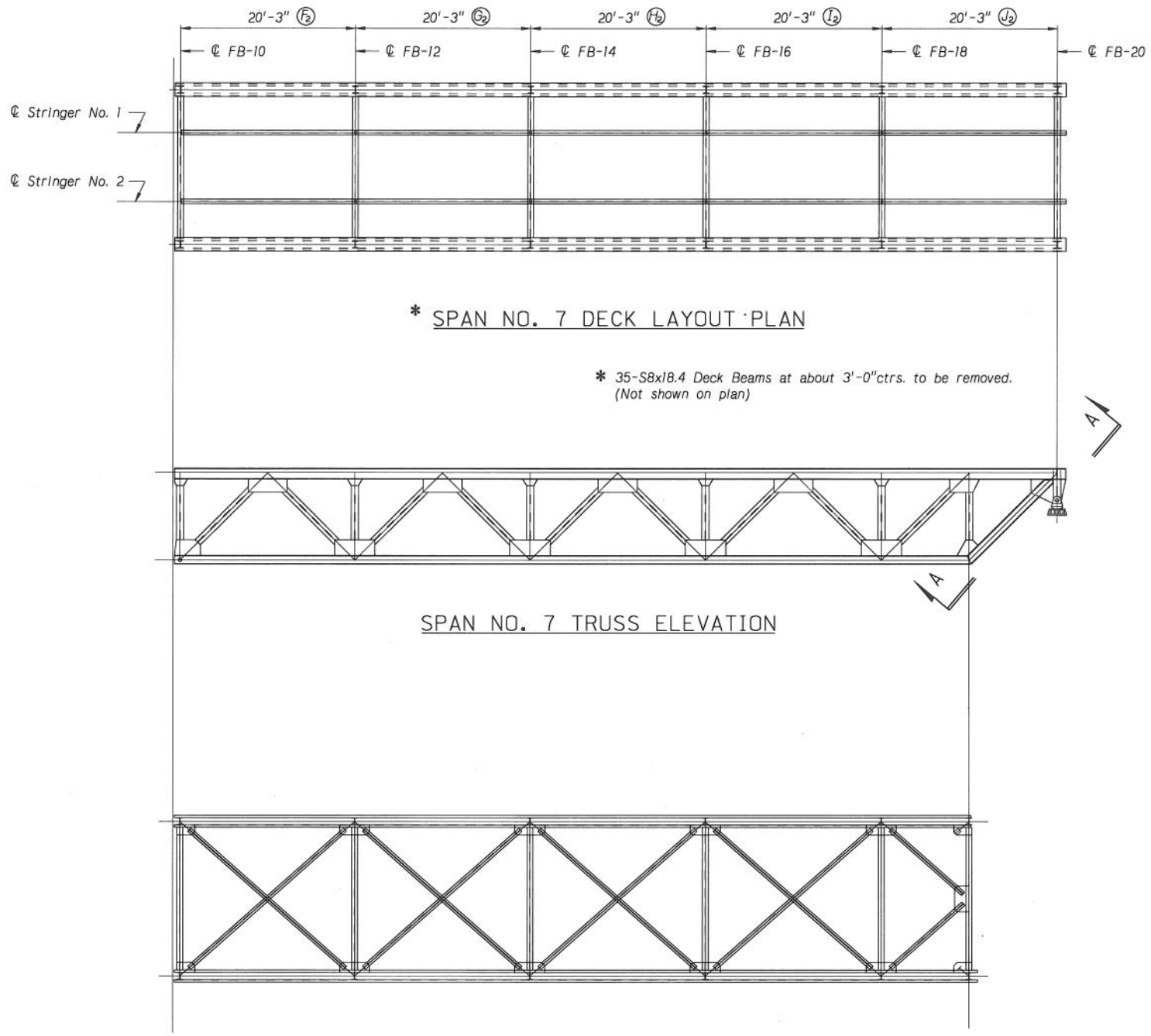

◯ = Location Area

Notes:

All Members Shown are Existing.

See Sheet 11 of 19 for those Members to be Replaced.

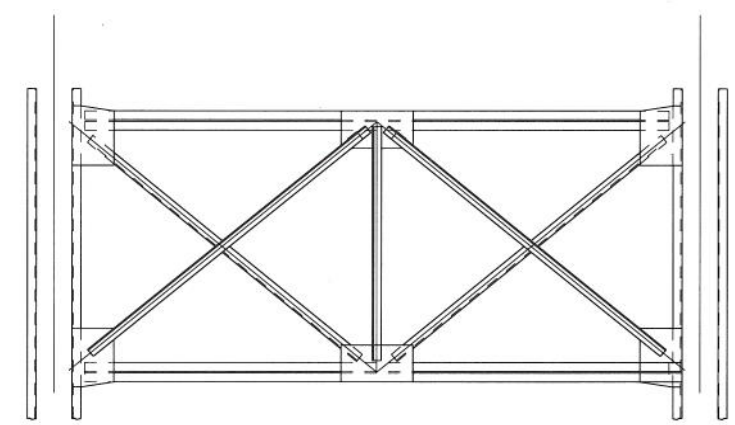

VIEW A-A

PROJECT NUMBER	SHEET NO.
34-7 (122)	

C.N. 22246

STRUCTURE NUMBER

PROFESSIONAL STRUCTURAL ENGINEER
LYMAN D. FREEMON
E-2005
STATE OF NEBRASKA

BRIDGE ENGINEER

1416'-4½" 9-SPAN TRUSS
BRIDGE - REDECK AND REHAB
PLAN & ELEVATION SPAN NO. 9

DATE

CHECKED BY

LOCATION MISSOURI RIVER BRIDGE AT PLATTSMOUTH
SKEW 0°
ROADWAY 20'-0"
DESIGN LIVE LOAD

COUNTY CASS
HWY. NO. U.S. 34
REF. POST.
STA.

DETAILED BY

DESIGNED BY

STATE OF NEBRASKA - DEPARTMENT OF ROADS - BRIDGE DIVISION

Nebraska

SPECIAL PLAN NO. 10/19

Sheet G

plattsmouth3.dgn

STRINGERS TO BE REPLACED					
Location		Existing Member (Remove)	Replace with New Member	Length of New Member	Weight of New Member
Stringer No.	Area				
1	Ⓒ	W 24 x 70	W 24 x 76	25'-0½" ±	1,903.17 lbs.
3	Ⓘ	W 24 x 70	W 24 x 76	25'-0½" ±	1,903.17 lbs.
1	Ⓜ	W 24 x 70	W 24 x 76	25'-0½" ±	1,903.17 lbs.
2	Ⓜ	W 24 x 84.5	W 24 x 84	25'-0½" ±	2,103.50 lbs.
3	Ⓜ	W 24 x 70	W 24 x 76	25'-0½" ±	1,903.17 lbs.

LATERAL BRACINGS TO BE REPLACED					
Quantity & Location		Existing Members (Remove)	Replace with New Members	Length of New Members	Weight of New Members
Bracing Qty.	Area				
2	Ⓐ	L4x3x5/16	L4x3x5/16	35'-5" ±	510 lbs.
2	Ⓑ	L4x3x5/16	L4x3x5/16	35'-5" ±	510 lbs.
2	Ⓒ	L4x3x5/16	L4x3x5/16	35'-5" ±	510 lbs.
2	Ⓘ	L6x4x9/16	L6x4x9/16	35'-5" ±	1,282 lbs.
2	Ⓙ	L6x4x1/2	L6x4x1/2	35'-5" ±	1,148 lbs.
2	Ⓧ	L6x4x3/8	L6x4x3/8	35'-5" ±	871 lbs.
2	Ⓐi	L3x2½x5/16	L3x2½x5/16	35'-5" ±	397 lbs.
2	Ⓖi	L4x3x5/16	L4x3x5/16	27'-5" ±	395 lbs.
2	Ⓠi	L4x3x5/16	L4x3x5/16	27'-5" ±	395 lbs.

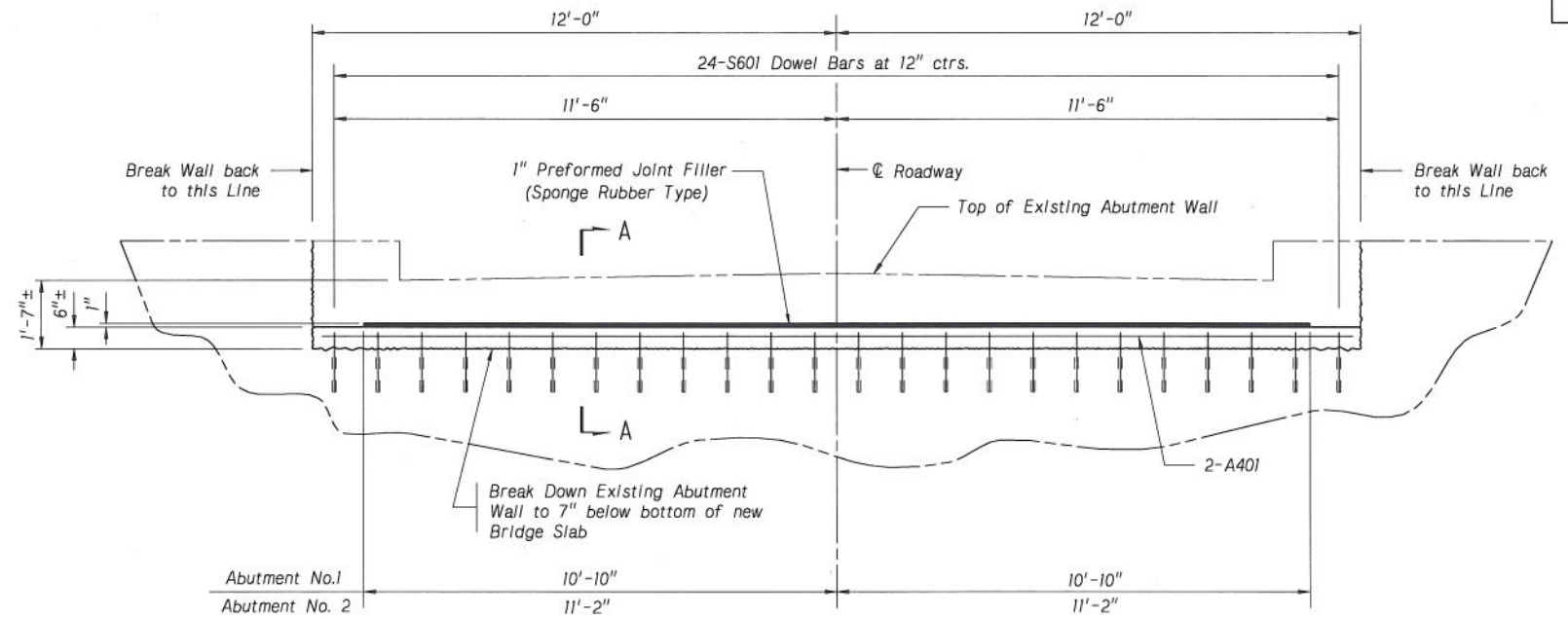

REHAB OF ABUTMENT NO. 1 AND 2

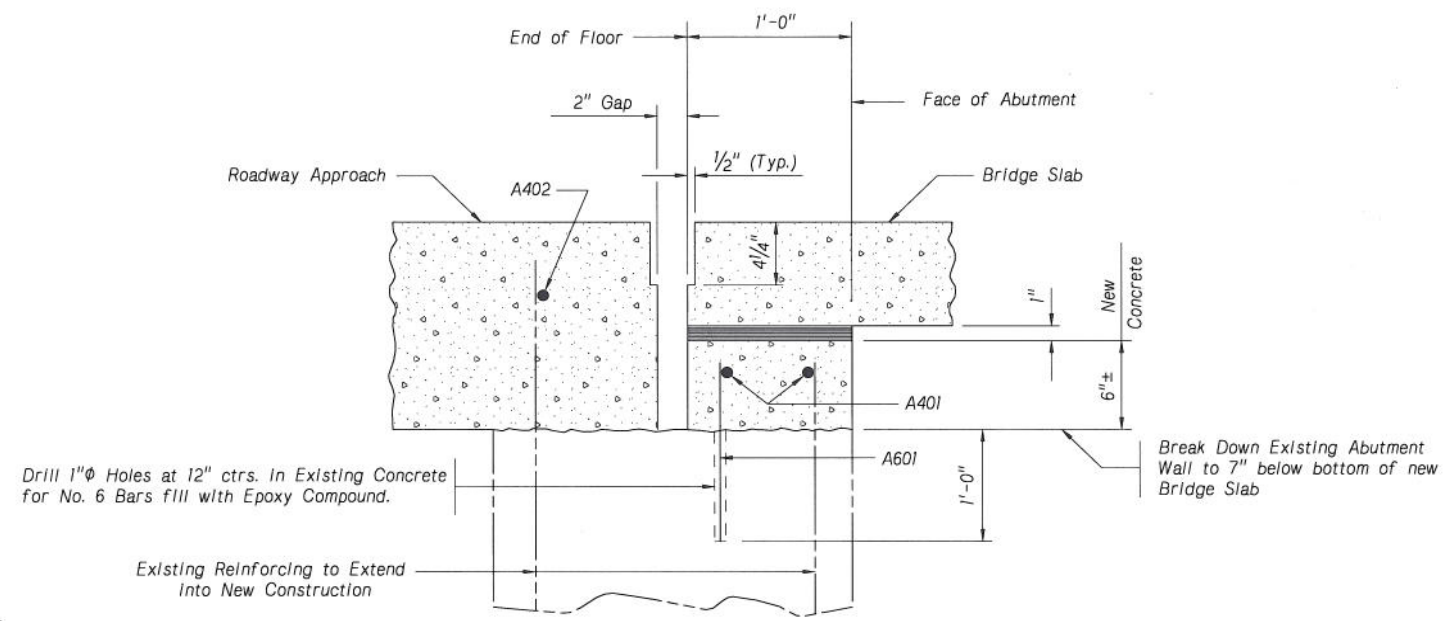

SECTION A-A

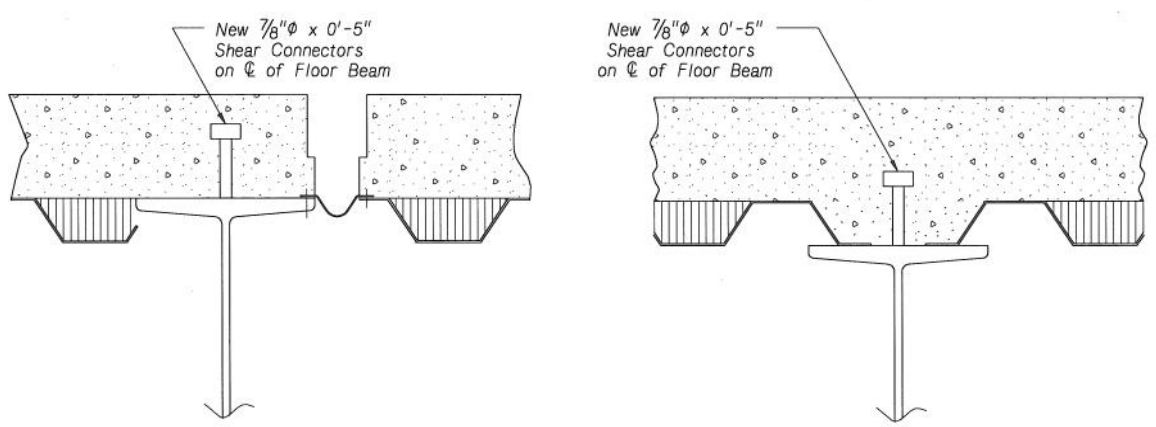

FLOOR BEAM FB-12
FLOOR BEAM FB-20

FLOOR BEAM FB-0 THRU FB-11
FLOOR BEAM FB-13 THRU FB-19
FLOOR BEAM FB-21 THRU FB-32

NEW SHEAR CONNECTOR PLACEMENT

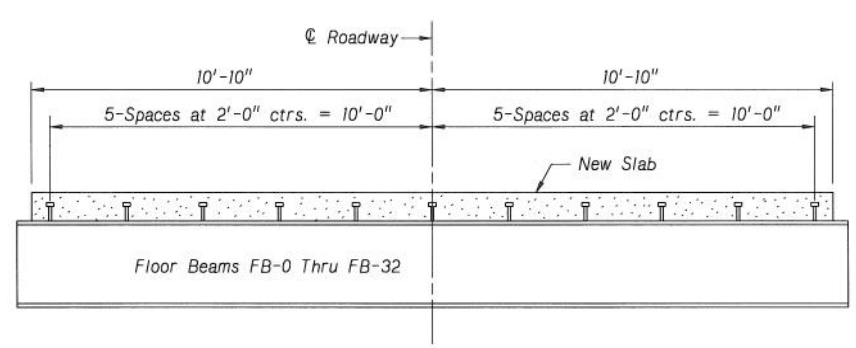

SHEAR CONNECTOR LAYOUT

PROJECT NUMBER	SHEET NO.
34-7 (122)	

C.N. 22246

STRUCTURE NUMBER

PROFESSIONAL STRUCTURAL ENGINEER LYMAN D. FREEMON E-2005 STATE OF NEBRASKA

BRIDGE ENGINEER

1416'-4½" 9-SPAN TRUSS
BRIDGE - REDECK AND REHAB
BEAM & SPRINGER REPLACEMENT SCHEDULE AND ABUTMENT REHAB DETAILS

LOCATION MISSOURI RIVER BRIDGE AT PLATTSMOUTH
SKEW 0°
ROADWAY 20'-0"
DESIGN LIVE LOAD

COUNTY CASS
HWY. NO. U.S. 34
REF. POST.
STA.

DESIGNED BY | DETAILED BY | CHECKED BY | DATE

STATE OF NEBRASKA - DEPARTMENT OF ROADS - BRIDGE DIVISION

Nebraska

SPECIAL PLAN NO. 11/19

plattsmouth3.dgn

Sheet H

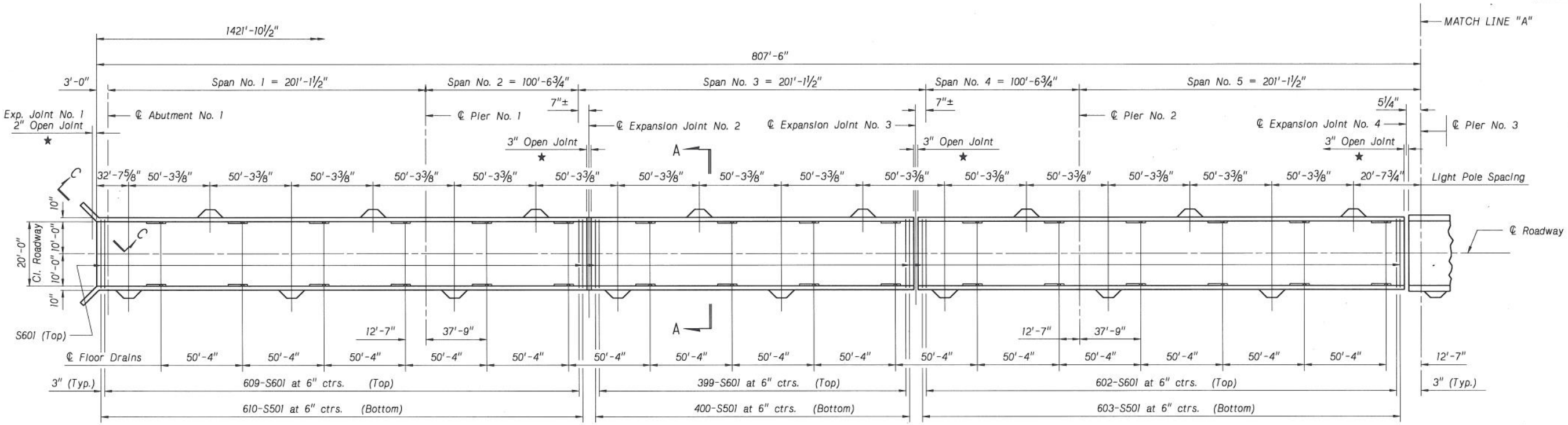

SLAB REINFORCING LAYOUT FOR SPANS 1 THRU 5

Not to Scale

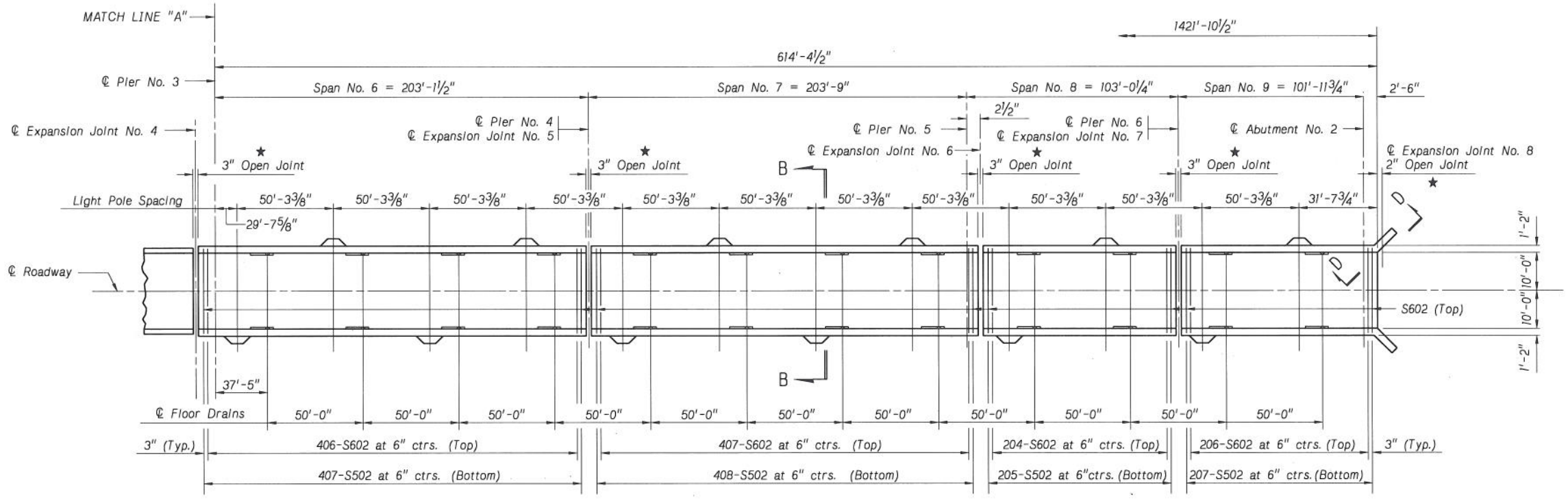

SLAB REINFORCING LAYOUT FOR SPANS 6 THRU 9

Not to Scale

Notes:

For Longitudinal Reinforcement In Slab see Sheet 13 of 19.
For Sections A-A and B-B see Sheet 13 of 19.
For Sections C-C and D-D see Sheet 14 of 19.
★ Use Precompressed Polyurethane Foam at Expansion Joints.
For Details of Expansion Joints see Sheet 15 of 19.
Dimensions shown are Horizontal.
See Sheet 17 of 19 for Details of Light Pole Bases.

PROJECT NUMBER	SHEET NO.
34-7 (122)	

C.N. 22246

STRUCTURE NUMBER

PROFESSIONAL STRUCTURAL ENGINEER LYMAN D. FREEMON E-2005 STATE OF NEBRASKA

BRIDGE ENGINEER

1416'-4½" 9-SPAN TRUSS
BRIDGE - REDECK AND REHAB
SLAB REINFORCING LAYOUTS

DATE

CHECKED BY

DETAILED BY

DESIGNED BY

LOCATION MISSOURI RIVER BRIDGE AT PLATTSMOUTH
SKEW 0°
ROADWAY 20'-0"
DESIGN LIVE LOAD

COUNTY CASS
HWY. NO. U.S. 34
REF. POST.
STA.

STATE OF NEBRASKA - DEPARTMENT OF ROADS - BRIDGE DIVISION

Nebraska

SPECIAL PLAN NO. 12/19

plattsmouth4.dgn

Sheet A

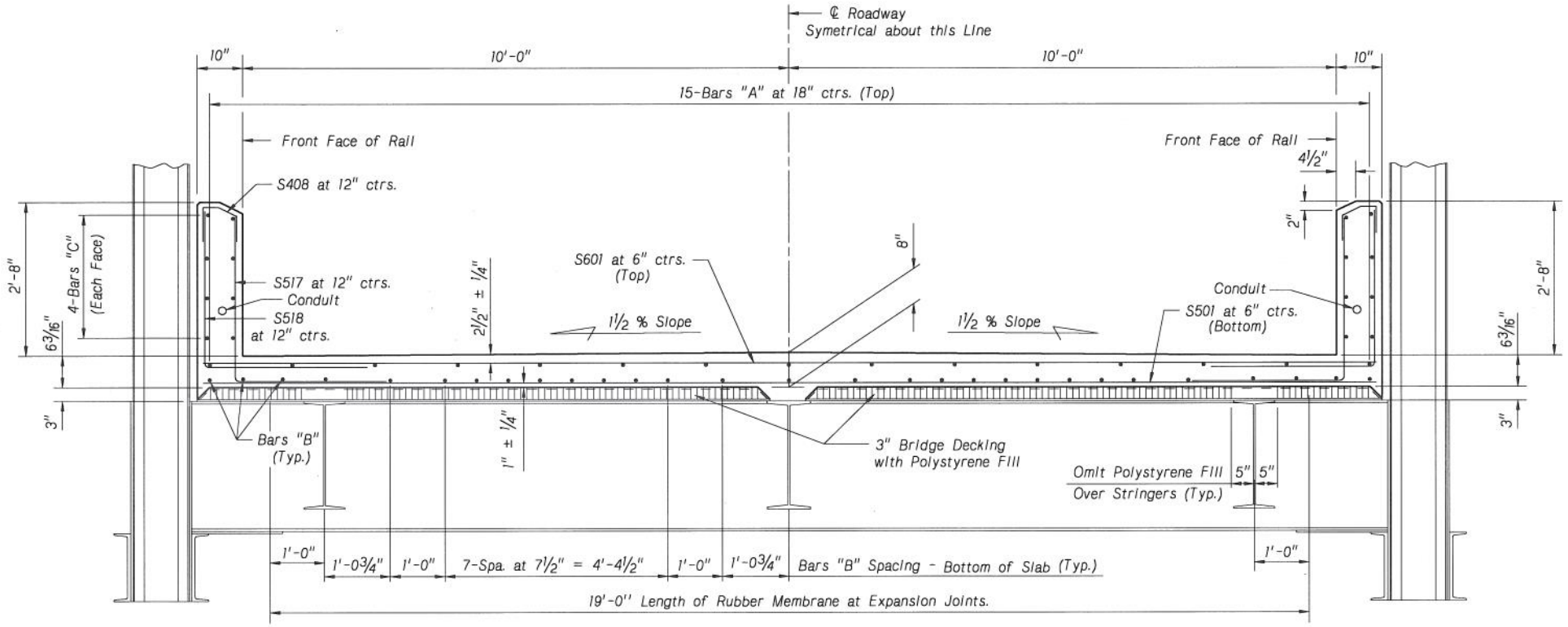

SECTION A-A

Scale: ¾" = 1'-0"

BAR SCHEDULE FOR SPANS 1 THRU 5			
Span No.	Bars "A"	Bars "B"	Bars "C"
Span No. 1 & 2	S401	S503	S506
Span No. 3	S402	S504	S507
Span No. 4 & 5	S403	S505	S508

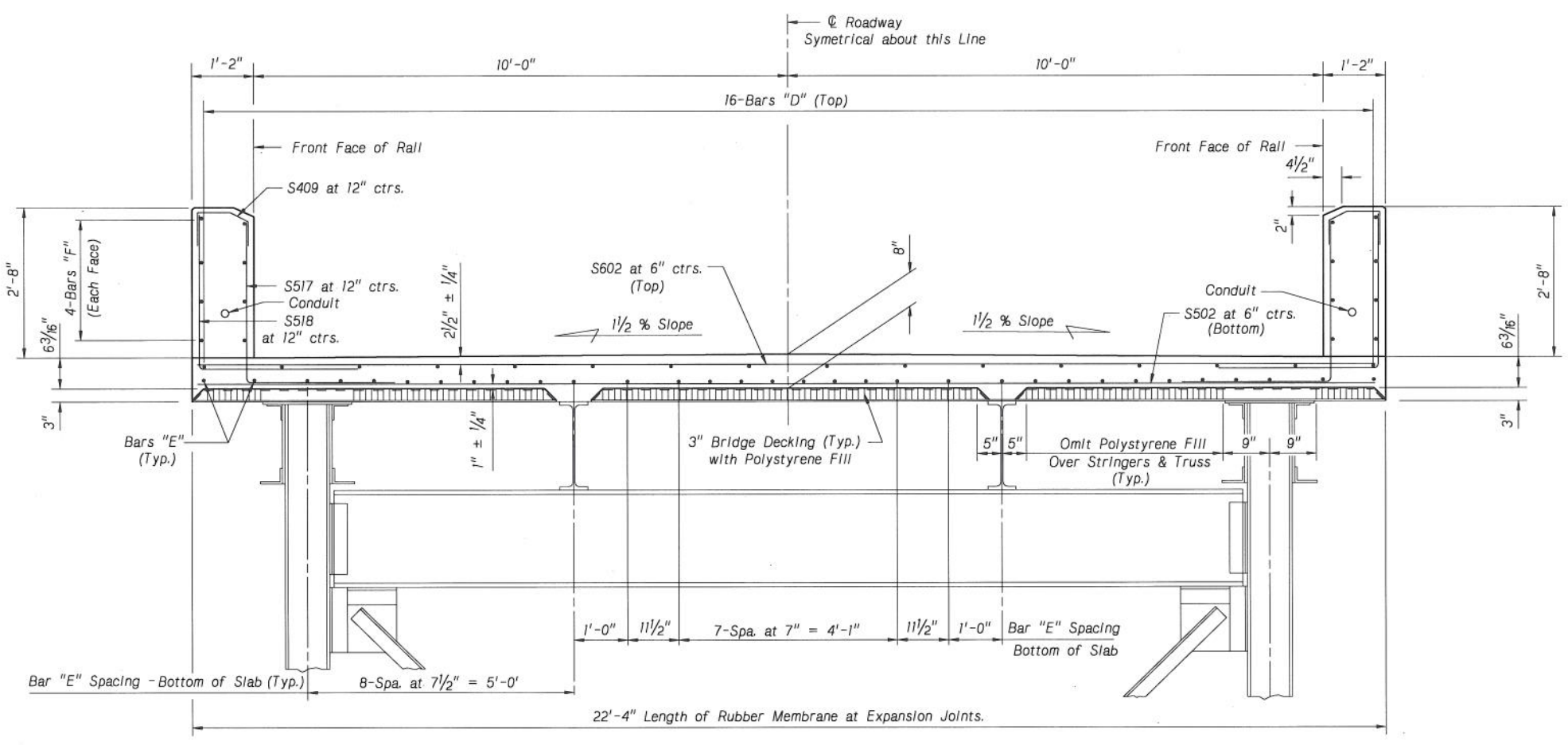

SECTION B-B

Scale: ¾" = 1'-0"

BAR SCHEDULE FOR SPANS 6 THRU 9			
Span No.	Bars "D"	Bars "E"	Bars "F"
Span No. 6	S404	S509	S513
Span No. 7	S405	S510	S514
Span No. 8	S406	S511	S515
Span No. 9	S407	S512	S516

PROJECT NUMBER	SHEET NO.
34-7 (122)	

C.N. 22246

STRUCTURE NUMBER

PROFESSIONAL STRUCTURAL ENGINEER
LYMAN D. FREEMON
E-2005
STATE OF NEBRASKA

BRIDGE ENGINEER

1416'-4½" 9-SPAN TRUSS
BRIDGE - REDECK AND REHAB
SLAB CROSS SECTIONS

DATE

LOCATION MISSOURI RIVER BRIDGE AT PLATTSMOUTH
SKEW 0°
ROADWAY 20'-0"
DESIGN LIVE LOAD

CHECKED BY

DETAILED BY

DESIGNED BY

COUNTY CASS
HWY. NO. U.S. 34
REF. POST.
STA.

STATE OF NEBRASKA - DEPARTMENT OF ROADS - BRIDGE DIVISION

Nebraska

SPECIAL PLAN NO. 13/19

plattsmouth4.dgn

Sheet B

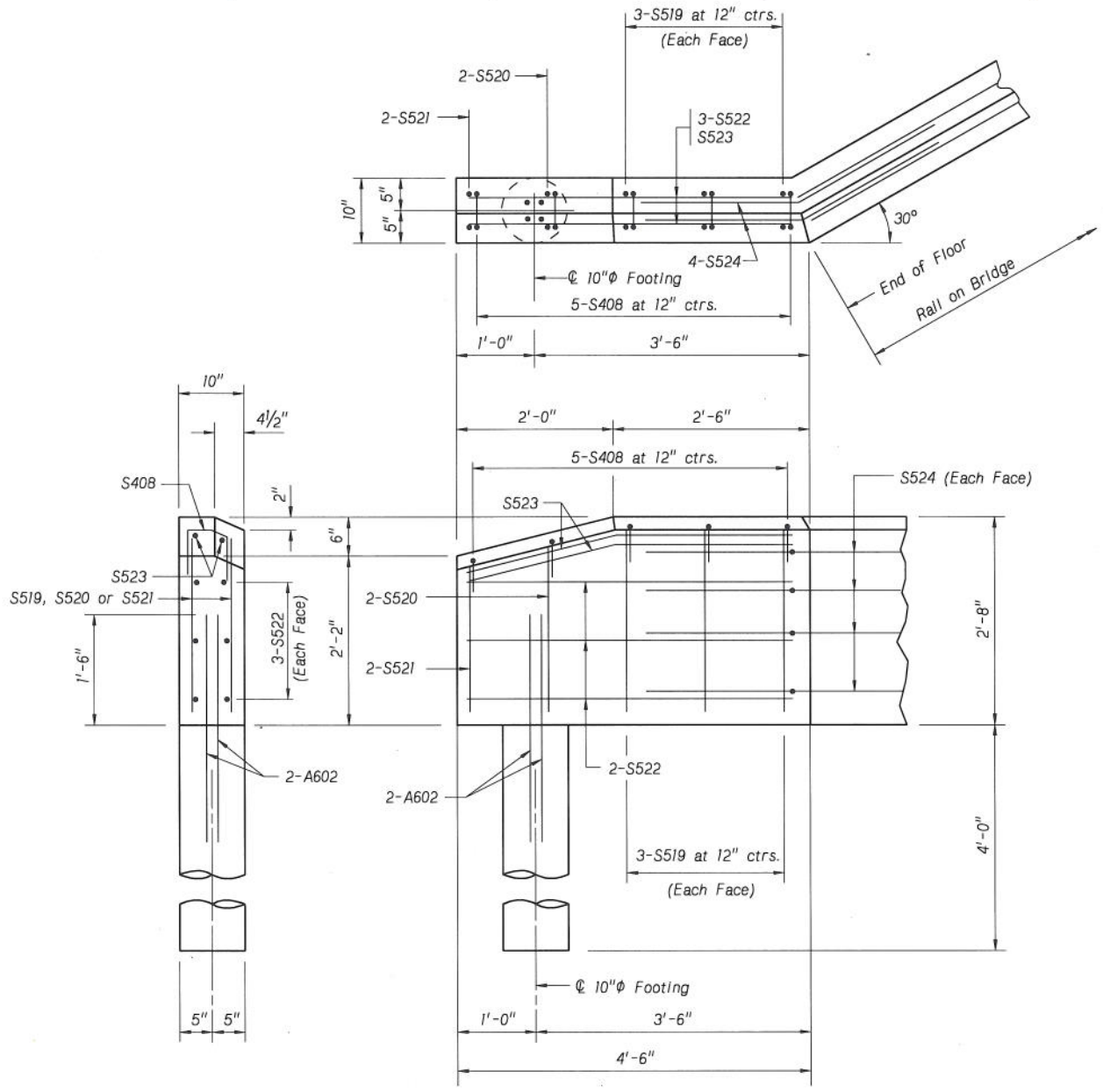

SECTION C-C

Scale: 1" = 1'-0"

Abutment No. 1 North Rail (As Shown)

Abutment No. 1 South Rail (Opposite Hand)

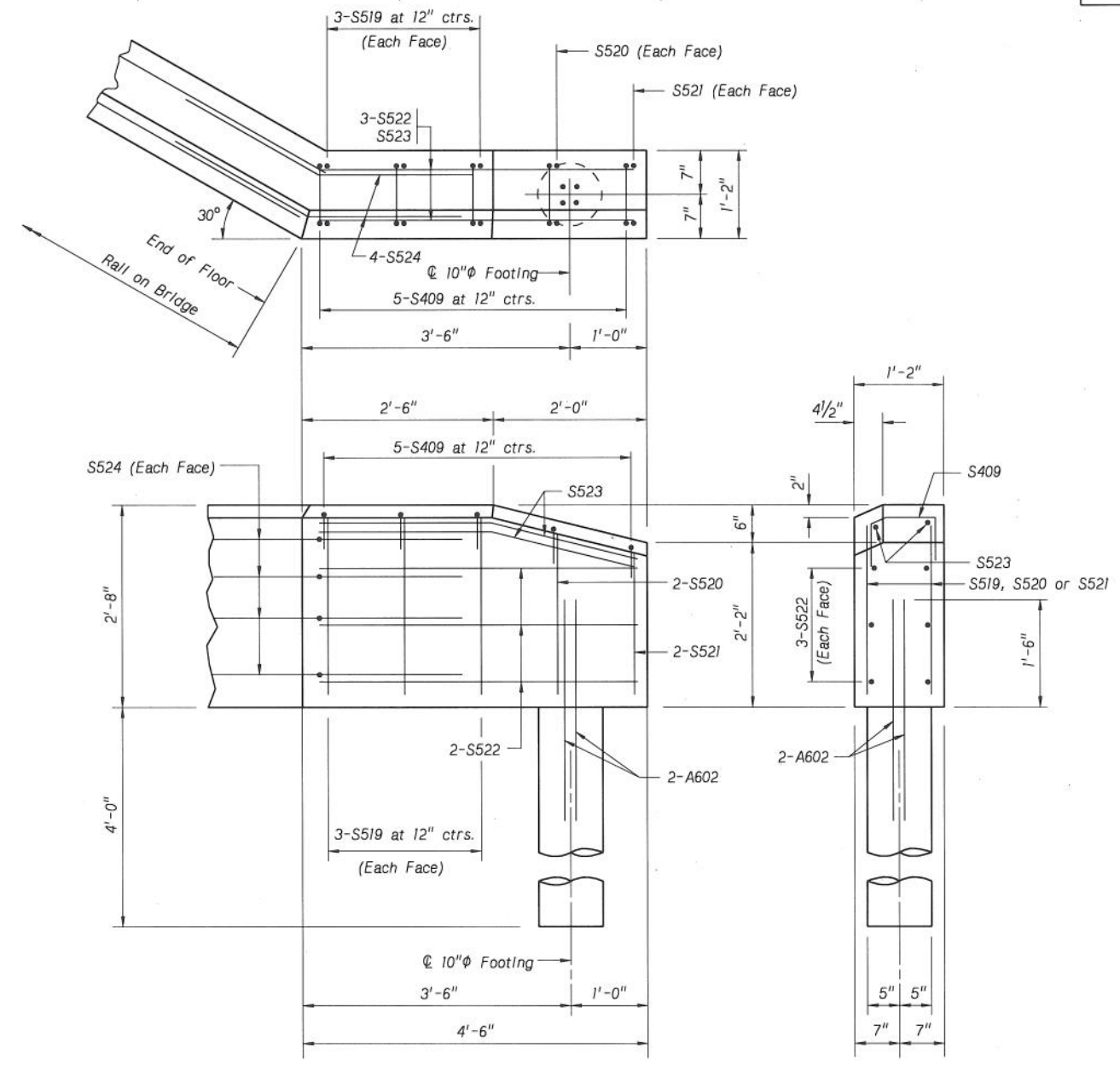

SECTION D-D

Scale: 1" = 1'-0"

Abutment No. 2 North Rail (As Shown)

Abutment No. 2 South Rail (Opposite Hand)

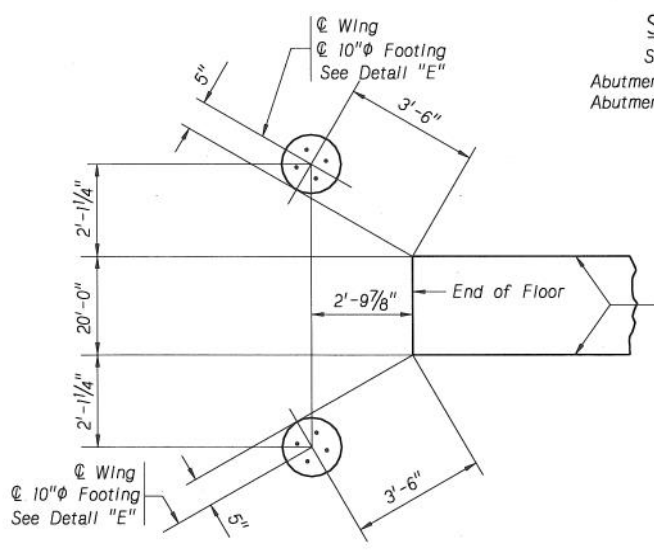

FOOTING LAYOUT AT ABUTMENT NO. 1

Not to Scale

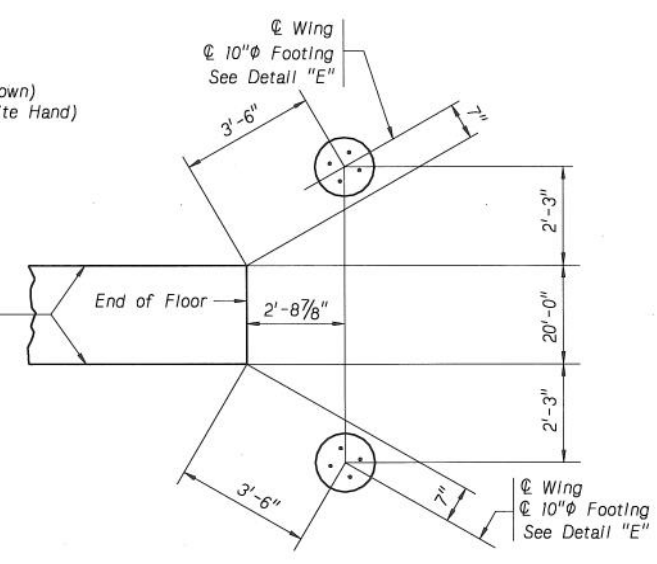

FOOTING LAYOUT AT ABUTMENT NO. 2

Not to Scale

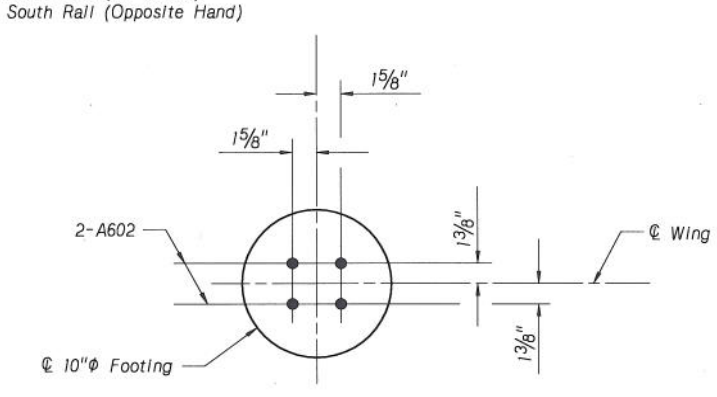

DETAIL "E"

PROJECT NUMBER	SHEET NO.
34-7 (122)	

C.N. 22246

STRUCTURE NUMBER

PROFESSIONAL STRUCTURAL ENGINEER LYMAN D. FREEMON E-2005 STATE OF NEBRASKA

BRIDGE ENGINEER

1416'-4½" 9-SPAN TRUSS
BRIDGE - REDECK AND REHAB
WING ELEVATIONS

LOCATION MISSOURI RIVER BRIDGE AT PLATTSMOUTH
SKEW 0°
ROADWAY 20'-0"
DESIGN LIVE LOAD

COUNTY CASS
HWY. NO. U.S. 34
REF. POST.
STA.

DESIGNED BY | DETAILED BY | CHECKED BY | DATE

STATE OF NEBRASKA - DEPARTMENT OF ROADS - BRIDGE DIVISION

Nebraska

SPECIAL PLAN NO. 14/19

plattsmouth4.dgn

Sheet D

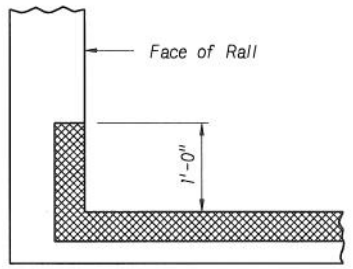

SECTION A-A
(Typical)

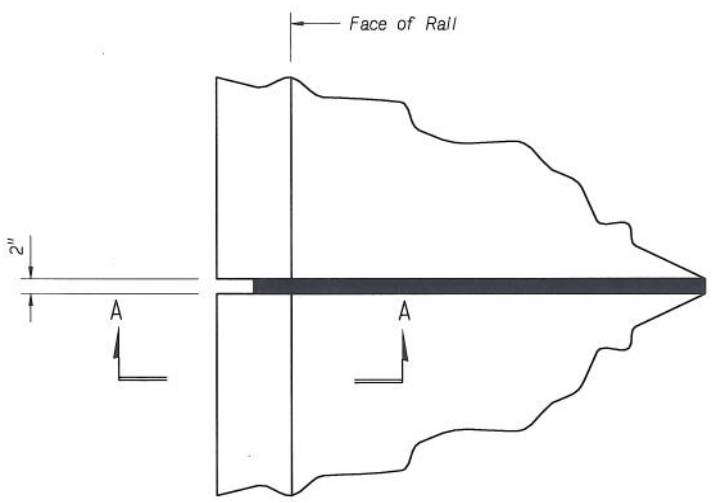

EXPANSION JOINT DETAIL PLAN

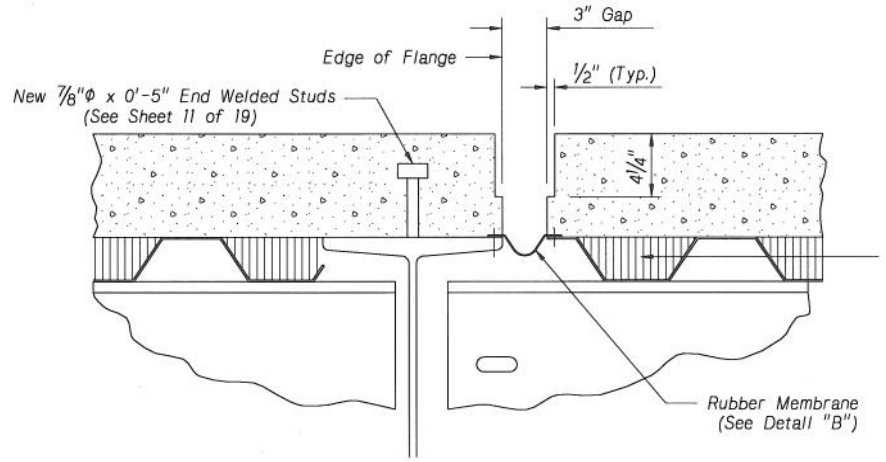

EXPANSION JOINT NO. 2 (As Shown)
EXPANSION JOINT NO. 3 (Opp. Hand)

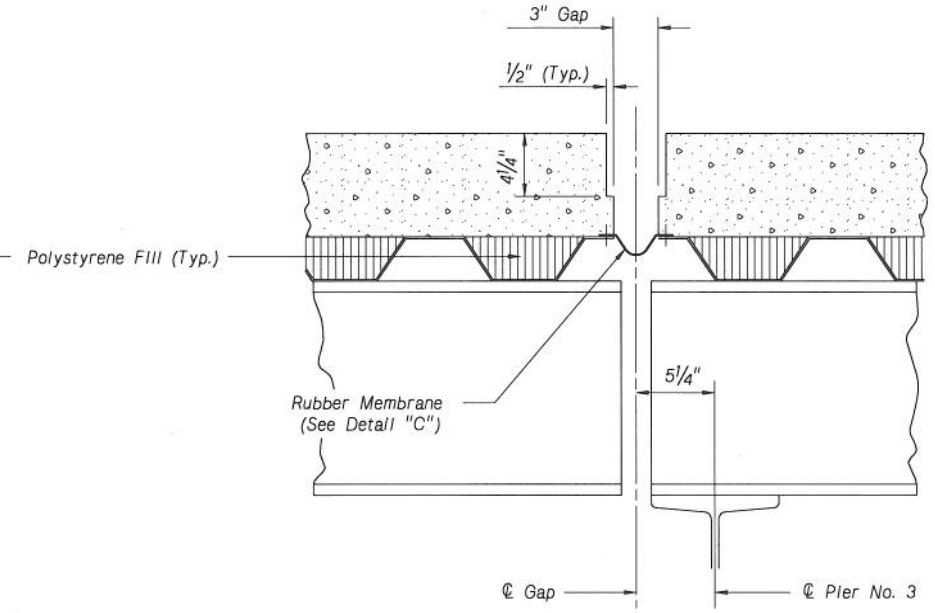

EXPANSION JOINT NO. 4

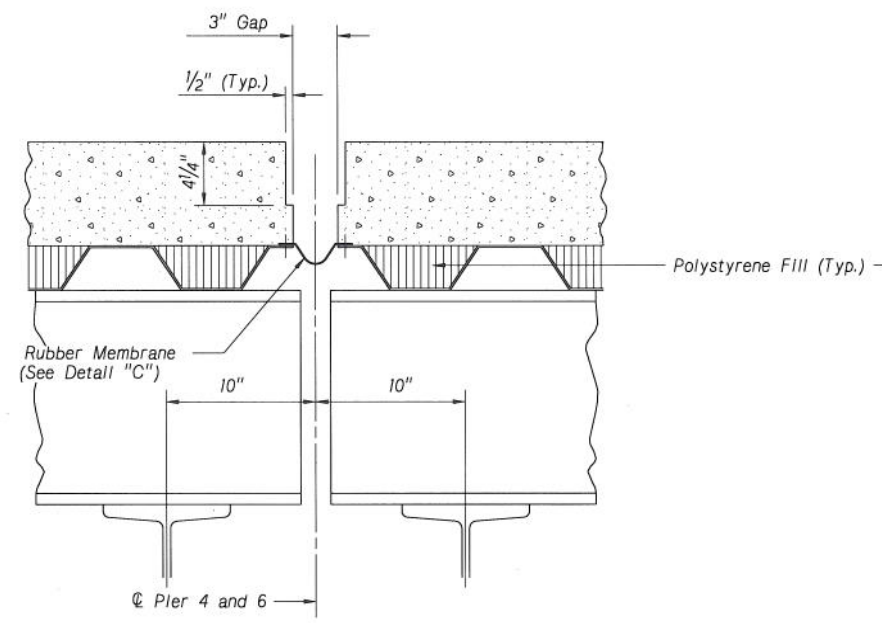

EXPANSION JOINT NO. 5
EXPANSION JOINT NO. 7

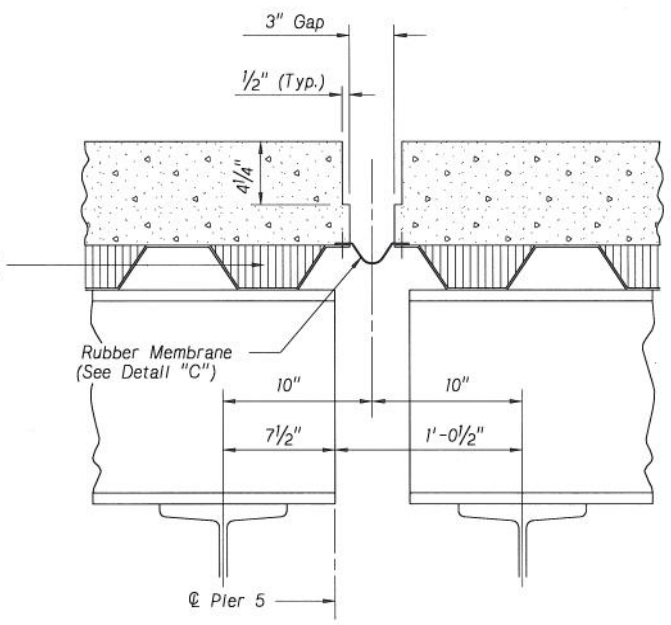

EXPANSION JOINT NO. 6

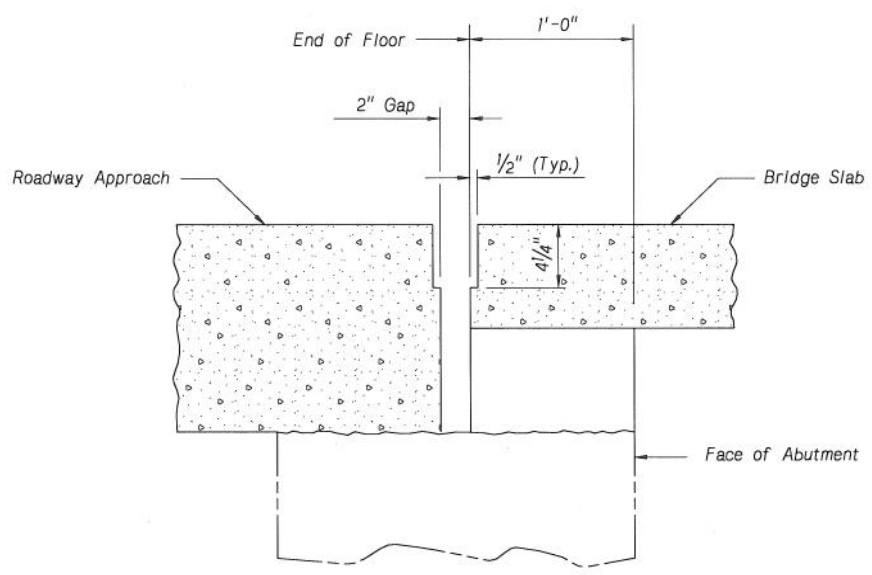

EXPANSION JOINT NO. 1
EXPANSION JOINT NO. 8

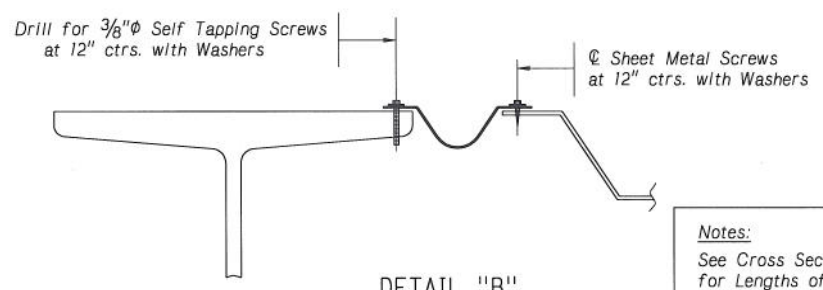

DETAIL "B"

Notes:
See Cross Section Sheet 13 of 19 for Lengths of Rubber Membranes.
Membrane to be in place before Concrete is poured.

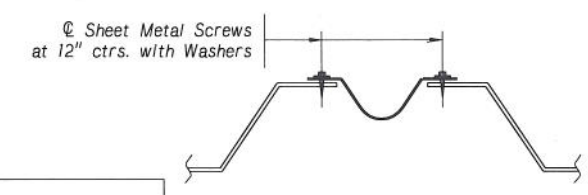

DETAIL "C"

PROJECT NUMBER	SHEET NO.
34-7 (122)	

C.N. 22246
STRUCTURE NUMBER

PROFESSIONAL STRUCTURAL ENGINEER
LYMAN D. FREEMON
E-2005
STATE OF NEBRASKA

BRIDGE ENGINEER

1416'-4 1/2" 9-SPAN TRUSS
BRIDGE - REDECK AND REHAB
EXPANSION JOINT DETAILS

DATE
CHECKED BY
DETAILED BY
DESIGNED BY

LOCATION MISSOURI RIVER BRIDGE AT PLATTSMOUTH
SKEW 0°
ROADWAY 20'-0"
DESIGN LIVE LOAD

COUNTY CASS
HWY. NO. U.S. 34
REF. POST.
STA.

STATE OF NEBRASKA - DEPARTMENT OF ROADS - BRIDGE DIVISION

Nebraska

SPECIAL PLAN NO. 15/19

plattsmouth4.dgn

Sheet C

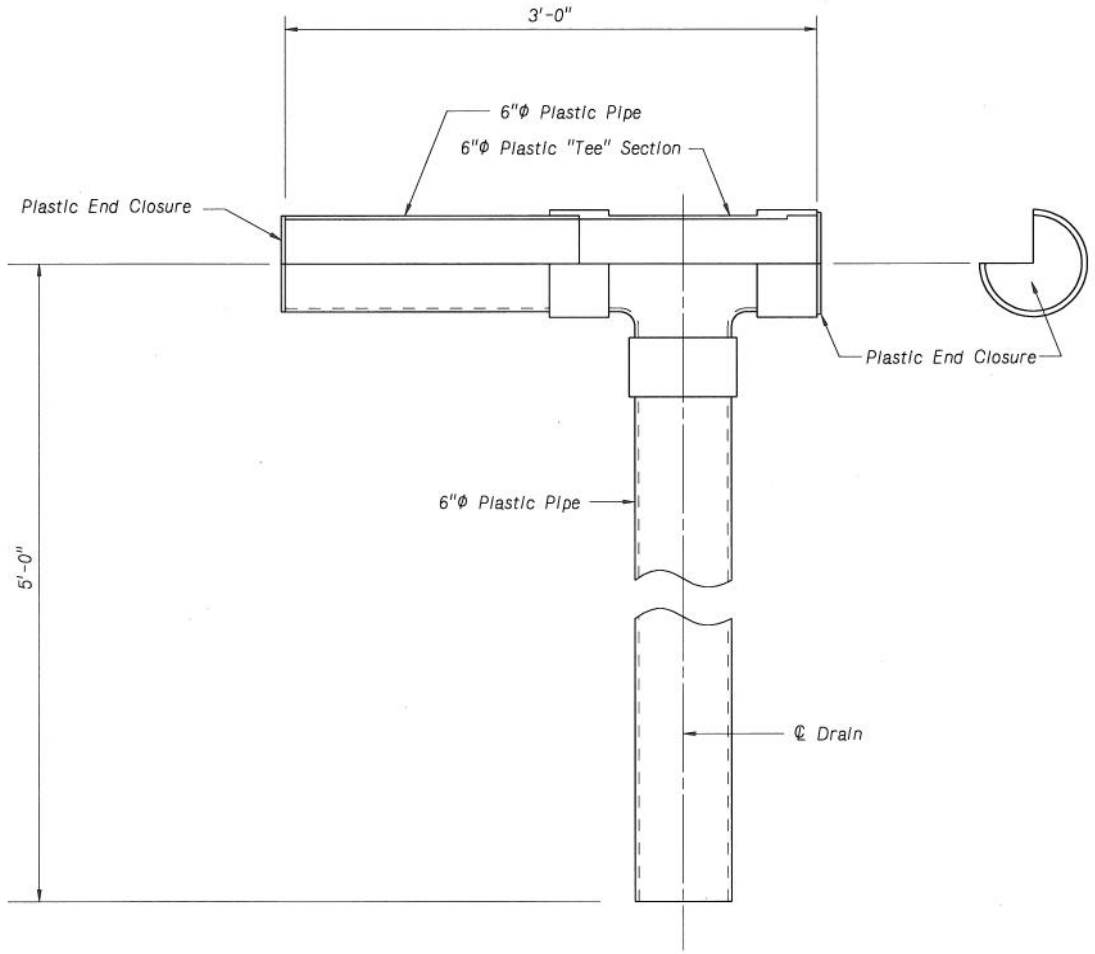

FLOOR DRAIN DETAIL FOR SPANS 1 THRU 5

(16-As Shown)

(16-Opposite Hand)

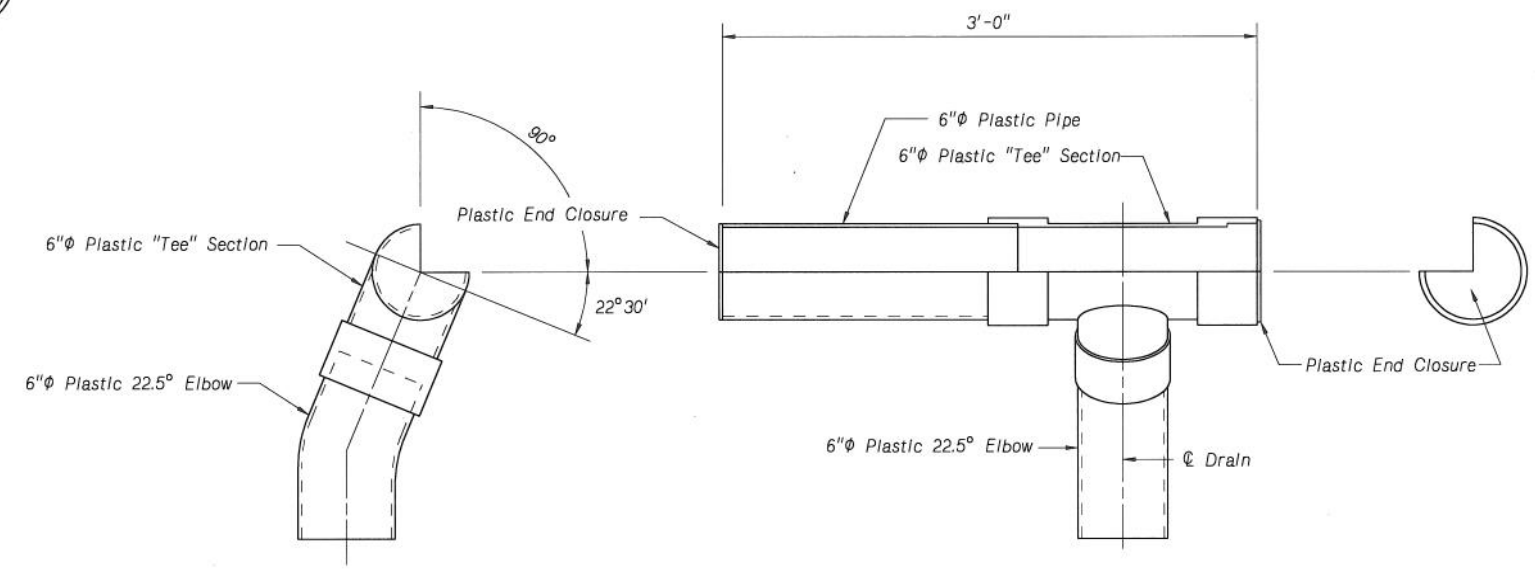

FLOOR DRAIN DETAIL FOR SPANS 6 THRU 9

(12-As Shown)

(12-Opposite Hand)

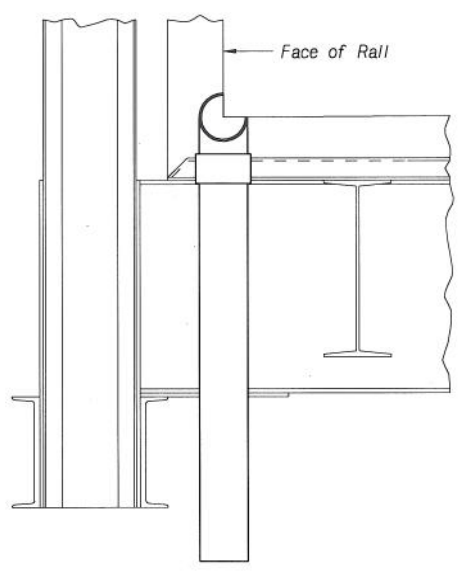

Note:

Field Burn Hole thru Deck for Placement of Drain.

PLACEMENT DETAIL OF DRAIN

(SPANS 1 THRU 5)

Note:

Field Burn Hole thru Deck for Placement of Drain.

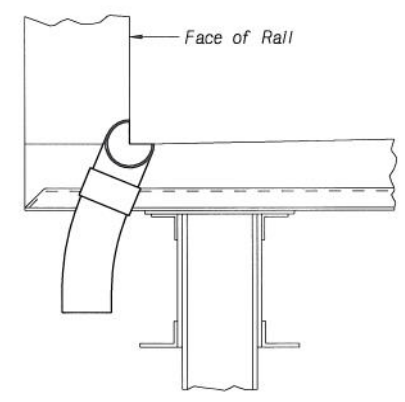

PLACEMENT DETAIL OF DRAIN

(SPANS 6 THRU 9)

PROJECT NUMBER	SHEET NO.
34-7 (122)	

C.N. 22246

STRUCTURE NUMBER

PROFESSIONAL STRUCTURAL ENGINEER LYMAN D. FREEMON E-2005 STATE OF NEBRASKA

BRIDGE ENGINEER

1416'-4½" 9-SPAN TRUSS
BRIDGE - REDECK AND REHAB
FLOOR DRAINS

DATE

CHECKED BY

DETAILED BY

DESIGNED BY

LOCATION MISSOURI RIVER BRIDGE AT PLATTSMOUTH

SKEW 0°

ROADWAY 20'-0"

DESIGN LIVE LOAD

COUNTY CASS

HWY. NO. U.S. 34

REF. POST.

STA.

STATE OF NEBRASKA - DEPARTMENT OF ROADS - BRIDGE DIVISION

Nebraska

SPECIAL PLAN NO. 16/19

plattsmouth3.dgn

Sheet 1

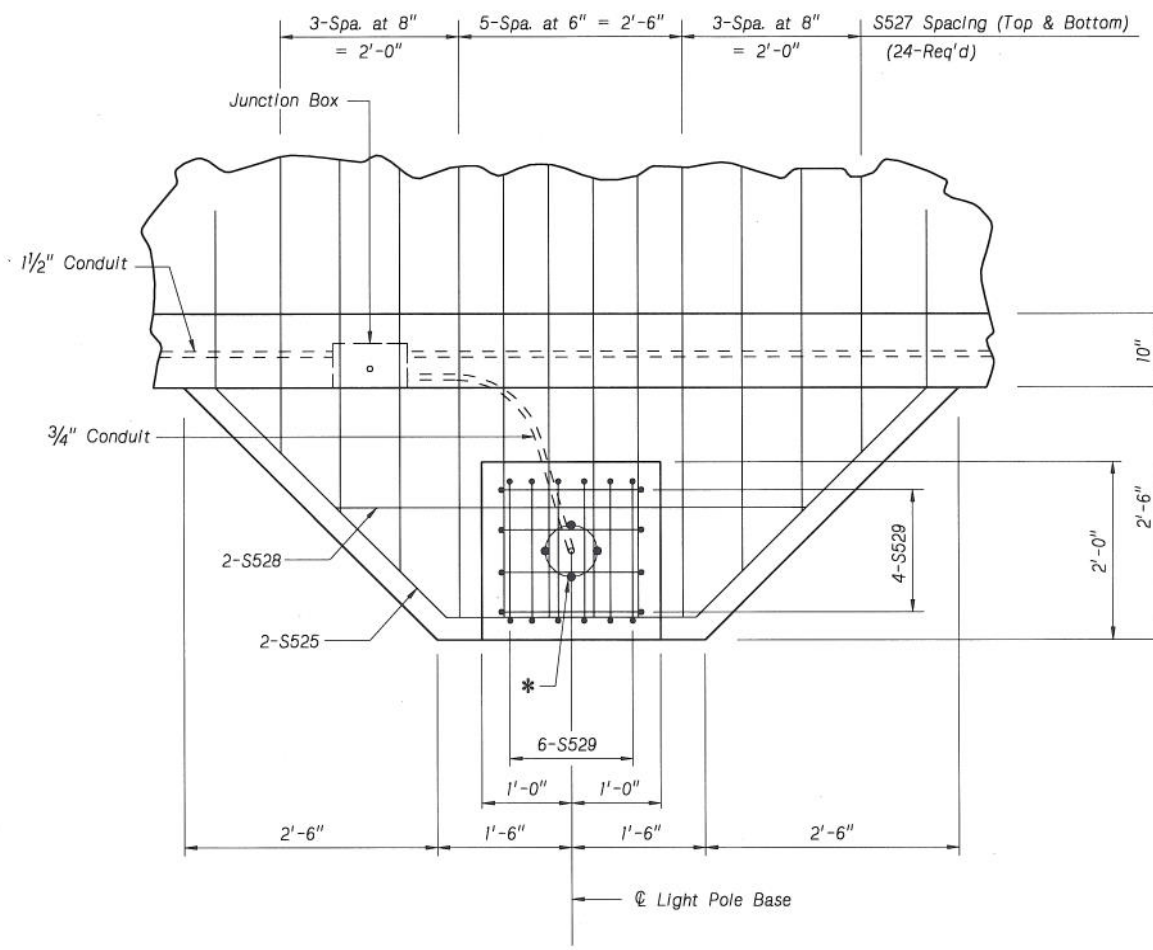

PLAN OF LIGHT POLE BASE FOR SPANS 1 THRU 5

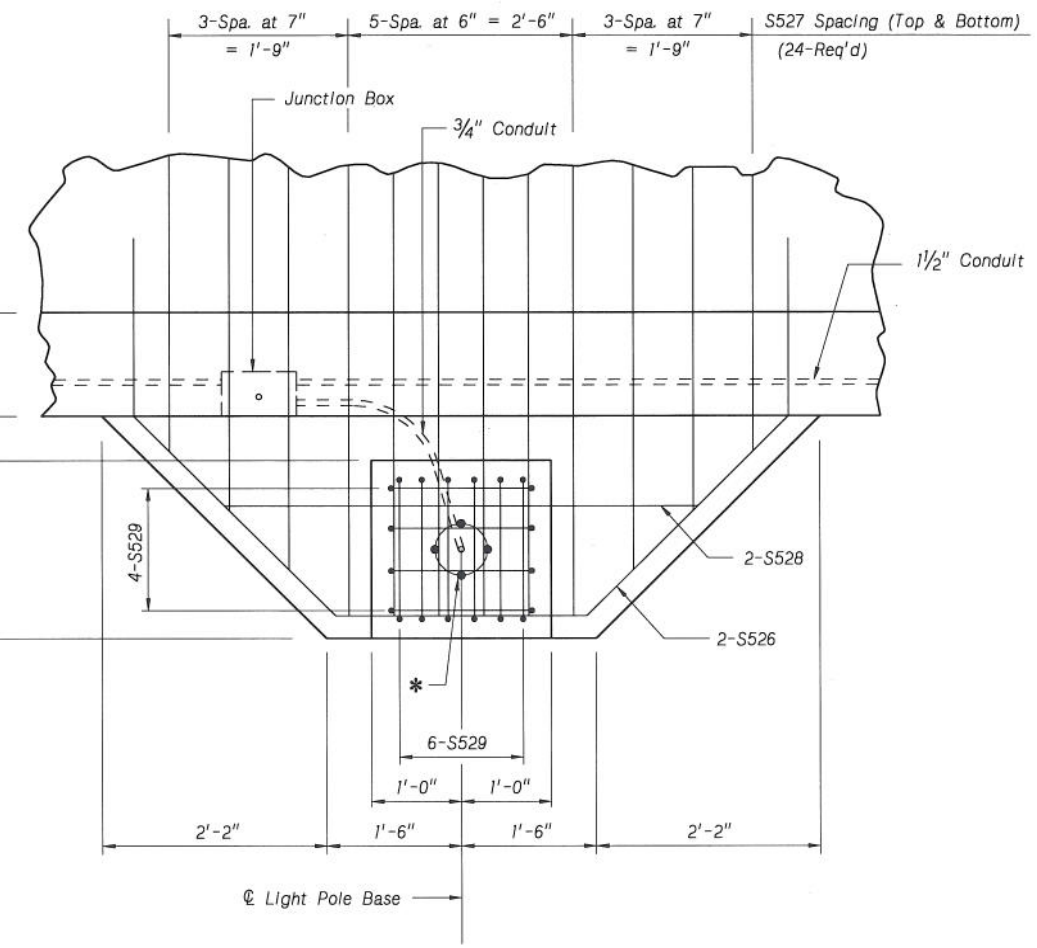

PLAN OF LIGHT POLE BASE FOR SPANS 6 THRU 9

* Anchor Bolt Diameter and Bolt Circle Diameter to be Determined by the Pole Manufacturer. Plate Lengths and Anchor Bolt Spacings shown are based on 7" Bolt Circle, Adjustments to be made if Pole Manufacturer requires a different Circle Diameter. (See Plan for Bolt Orientation)

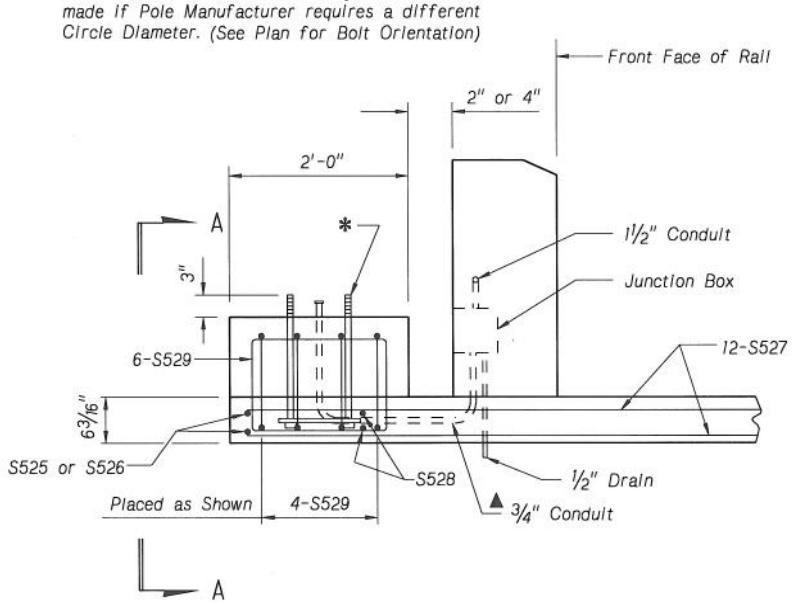

CROSS SECTION OF LIGHT POLE BASE

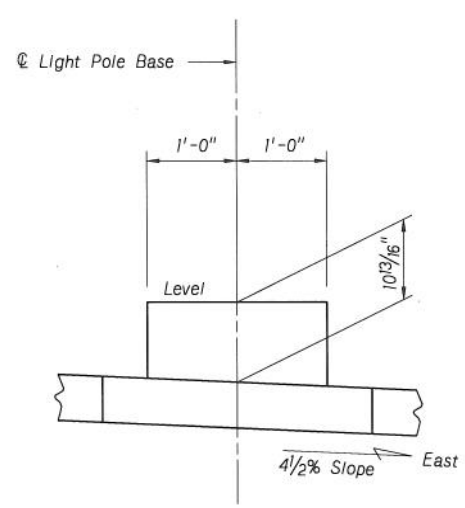

SECTION A-A

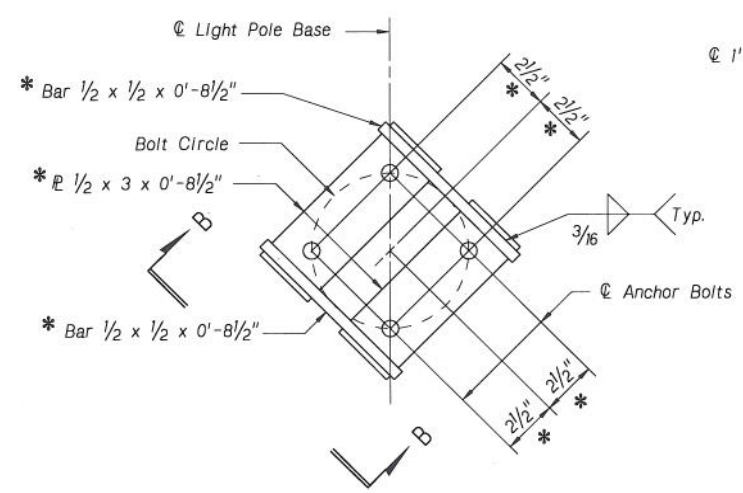

ANCHOR BOLT LAYOUT PLAN FOR LIGHT POLE

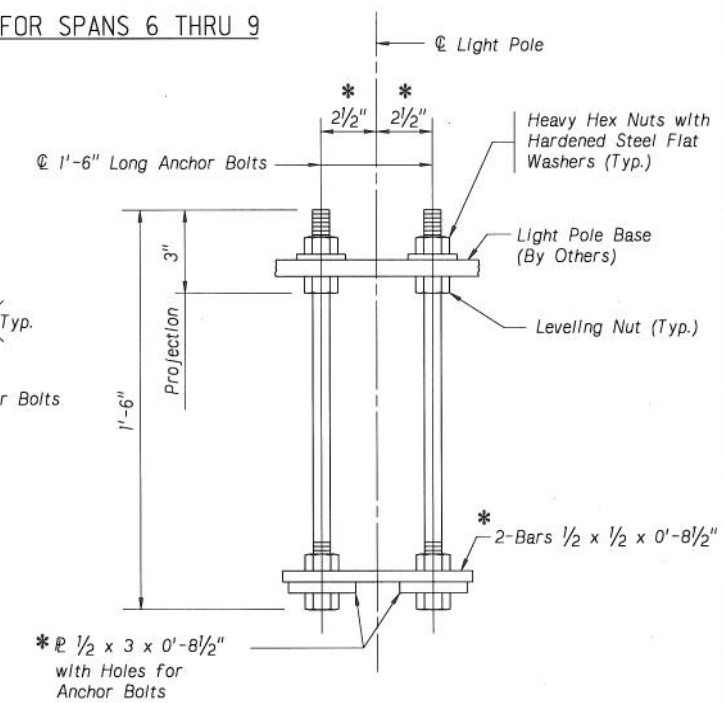

SECTION B-B

Note:
Work this Sheet with Sheet 18 of 19.

PROJECT NUMBER	SHEET NO.
34-7 (122)	

C.N. 22246

STRUCTURE NUMBER

PROFESSIONAL STRUCTURAL ENGINEER LYMAN D. FREEMON E-2005 STATE OF NEBRASKA

BRIDGE ENGINEER

1416'-4½" 9-SPAN TRUSS
BRIDGE - REDECK AND REHAB
LIGHT POLE BASES

DATE

CHECKED BY

DETAILED BY

DESIGNED BY

LOCATION MISSOURI RIVER BRIDGE AT PLATTSMOUTH
SKEW 0°
ROADWAY 20'-0"
DESIGN LIVE LOAD

COUNTY CASS
HWY. NO. U.S. 34
REF. POST.
STA.

STATE OF NEBRASKA - DEPARTMENT OF ROADS - BRIDGE DIVISION

Nebraska

SPECIAL PLAN NO. 17/19

plattsmouth4.dgn

Sheet E

GENERAL NOTES - ELECTRICAL CONDUIT INSTALLATION

All conduits shall be P.V.C. and bear the U.L. label.

All fittings used with P.V.C. conduit shall be P.V.C. Metallic fittings are not acceptable.

Expansion fittings shall be installed with conduit positioned with respect to ambient temperature and shall bear the U.L. label.

Conduit bends, elbows, and offsets shall be accurately formed.

The conduit installation shall be performed by or under the direct supervision of a competent Journeyman Electrician or Lineman.

Junction boxes for conduit shall be machineable quality gray iron castings, outside-flanged, with cover. Cover screws shall be stainless steel or brass. Boxes shall be gasketed; NEMA 4, with H.D. galvanized finish. Each junction box shall be provided with a drainpipe. Conduit entrances shall be slip holes. Sealing type lock nuts shall be used at all conduit entrances. Junction boxes shall be type "YR" as manufactured by O.Z. - Gedney, Spring City, Crouse-Hinds or approved equal .

Junction boxes, expansion fittings, all 3/4" conduit, conduit drains, 3/4" Liquidtight Flexible Conduit, couplings, anchor bolt assemblies and all other hardware and miscellaneous fittings required for the installation of the conduit system will be subsidiary to the item, "1 1/2" Electrical Conduit ".

Fittings used with Liquidtight Flexible Conduit must be approved for the application. Anchor bolts shall conform to the requirements of AASHTO M 314, Grade 55 or ASTM A675, Grade 90 (length as shown).

Anchor bolts shall be threaded 3" on both ends.

Each anchor bolt shall be furnished complete with three heavy hex nuts (Grade A) meeting the requirements of AASHTO M291 or ASTM A563 and one hardened steel flat washer conforming to AASHTO M293 or ASTM F436.

All bolts, nuts, washers, and the complete bolt assembly shall be galvanized in accordance with AASHTO M232 or A153.

The contractor shall furnish a certification stating that the anchor bolt material was meets the requirement of the applicable specification. The certification shall include a report of the tensile test results and chemical analysis. The report shall also include the name of the steel producer, AASHTO or ASTM designation number, grade, heat number, size and authorized signature.

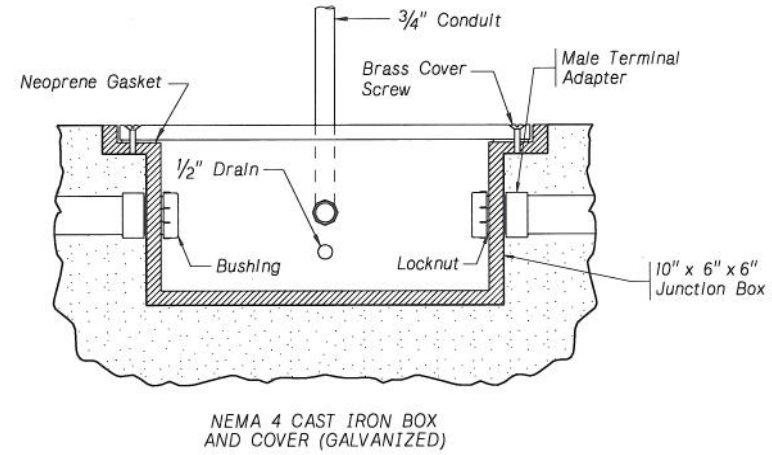

JUNCTION BOX

NOTE:
Install one drain between each Junction Box and Abutments. Electrical conduit shall be placed in such a manner as to provide a low spot at this point.

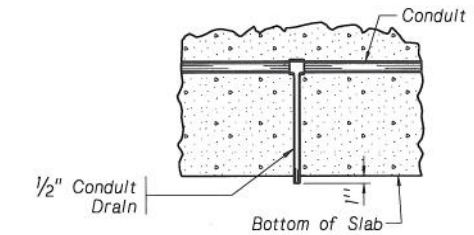

CONDUIT DRAIN
Not to Scale

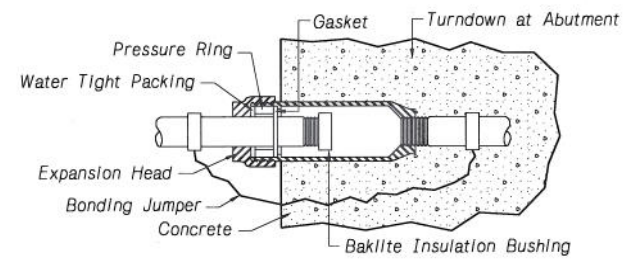

CONDUIT EXPANSION FITTING DETAIL
Not to Scale

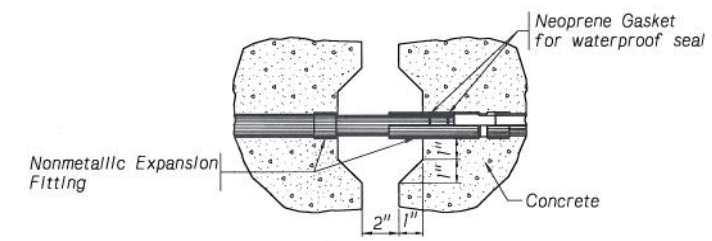

EXPANSION FITTING (4" Min. Movement)
Not to Scale

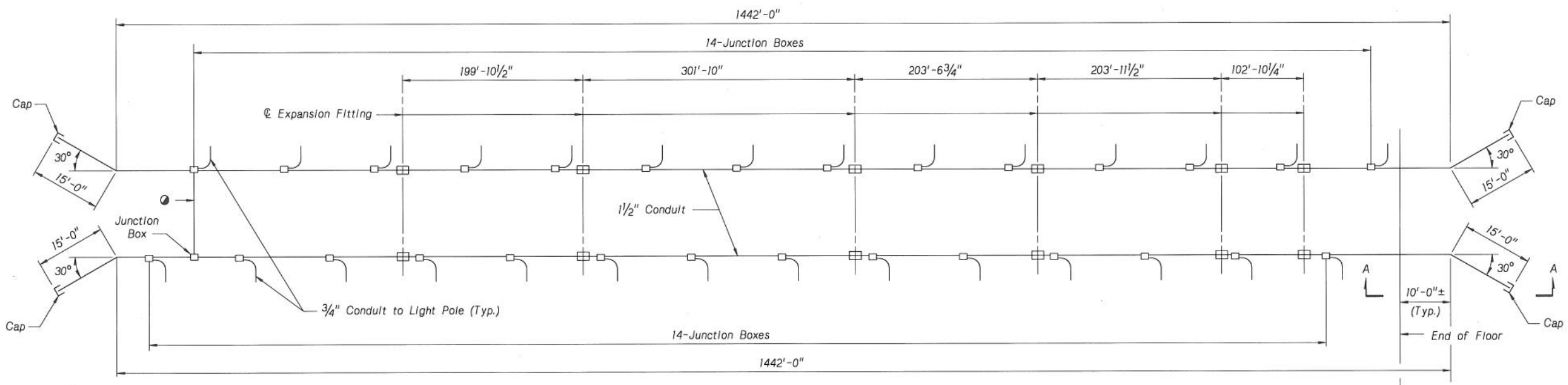

1 1/2" Conduit to Tie North Conduit to South Conduit. (Place in Bridge Slab)

ELECTRICAL CONDUIT LINES DIAGRAM

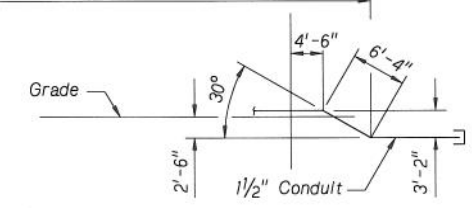

VIEW A-A
Typical all Four Ends

PROJECT NUMBER	SHEET NO.
34-7 (122)	

C.N. 22246

STRUCTURE NUMBER

PROFESSIONAL STRUCTURAL ENGINEER — LYMAN D. FREEMON E-2005 — STATE OF NEBRASKA

BRIDGE ENGINEER

1416'-4 1/2" 9-SPAN TRUSS
BRIDGE - REDECK AND REHAB
LIGHTING DETAILS

DATE

CHECKED BY

LOCATION MISSOURI RIVER BRIDGE AT PLATTSMOUTH
SKEW 0°
ROADWAY 20'-0"
DESIGN LIVE LOAD

DETAILED BY

DESIGNED BY

COUNTY CASS
HWY. NO. U.S. 34
REF. POST.
STA.

STATE OF NEBRASKA - DEPARTMENT OF ROADS - BRIDGE DIVISION

Nebraska

SPECIAL PLAN NO. 18/19

plattsmouth4.dgn

Sheet F

BILL OF BARS

	MARK	NO.	LENGTH	TYPE	"A"	"B"	"C"	"D"	"E"	"F"		PIN	HOOK	WEIGHT LBS
SLAB	S601	1,616	21'-2"	Str.										51,376.5
	S602	1,231	21'-10"	Str.										40,368.9
	S501	1,613	21'-2"	Str.										35,610.0
	S502	1,227	21'-10"	Str.										27,941.4
	S503	29	(4) 325'-0"	Str.										9,830.3
	S504	29	(5) 211'-11"	Str.										6,409.8
	S505	29	(6) 318'-11"	Str.										9,646.3
	S509	32	(5) 215'-6"	Str.										7,192.5
	S510	32	(5) 215'-11"	Str.										7,206.4
	S511	32	(7) 107'-2"	Str.										3,576.8
	S512	32	(7) 109'-0"	Str.										3,638.0
	S525	32	13'-1"	134	2'-0"	3'-2"	2'-9"	2'-3"	2'-3"			3¾"		436.7
	S526	24	12'-3"	134	2'-0"	2'-9"	2'-9"	1'-11"	1'-11"			3¾"		306.6
	S527	672	8'-0"	Str.										5,607.2
	S528	56	5'-3"	Str.										306.6
	S529	280	7'-0"	108	1'-0"	1'-6"	1'-0"					3¾"		2,044.3
	S401	15	(1) 319'-0"	Str.										3,196.4
	S402	15	(2) 209'-5"	Str.										2,098.4
	S403	15	(1) 315'-5"	Str.										3,160.5
	S404	16	(2) 213'-0"	Str.										2,276.5
	S405	16	(2) 213'-5"	Str.										2,281.0
	S406	16	(3) 106'-2"	Str.										1,134.7
	S407	16	(3) 108'-0"	Str.										1,154.3
													SUBTOTAL	= 226,800.1 LBS.
RAILS	S506	16	(4) 325'-0"	Str.										5,423.6
	S507	16	(5) 211'-11"	Str.										3,536.5
	S508	16	(6) 318'-11"	Str.										5,322.1
	S513	16	(5) 215'-6"	Str.										3,596.3
	S514	16	(5) 215'-11"	Str.										3,603.2
	S515	16	(7) 107'-2"	Str.										1,788.4
	S516	16	(7) 109'-0"	Str.										1,819.0
	S517	2,856	5'-6"	104	2'-9"	2'-9"						3¾"		16,383.4
	S518	2,856	5'-8"	104	2'-10"	2'-10"						3¾"		16,880.0
	S519	24	2'-2"	Str.										54.2
	S520	8	2'-0"	Str.										16.7
	S521	8	1'-9"	Str.										14.6
	S522	24	4'-0"	Str.										100.1
	S523	8	4'-2"	101	2'-3"	1'-11"	0'-5½"					3¾"		34.8
	S524	32	4'-0"	101	2'-0"	2'-0"	1'-0"					3¾"		133.5
	S408	1,630	2'-6"	133	1'-0"	0'-3"	0'-3"	1'-0"	0'-1¼"	0'-6"		2"		2,722.1
	S409	1,246	2'-10"	133	1'-0"	0'-7"	0'-3"	1'-0"	0'-1¼"	0'-10"		2"		2,358.3
													SUBTOTAL	= 63,786.8 LBS.
ABUTMENTS	A601	48	1'-5"	Str.										102.1
	A602	16	3'-0"	Str.										72.1
	A401	4	23'-6"	Str.										62.8
	A402	2	19'-6"	Str.										26.1
													SUBTOTAL	= 263.1 LBS.
													TOTAL	= 290,850.0 LBS.

BAR MARK

A413 — A 4 13

- 13: bar number:
  - 01 thru 49, general reinforcing
  - 70 thru 79, light pole reinforcing
  - 90 thru 99, curb or rail reinforcing
- 4: bar size
- A: type of bridge element - A=Abutment (P=Pier, B=Bent, S=Slab, N=Approach Slab)

(1) Includes Seven 2'-0" Laps
(2) Includes Five 2'-0" Laps
(3) Includes Two 2'-0" Laps
(4) Includes Eight 2'-6" Laps
(5) Includes Five 2'-6" Laps
(6) Includes Seven 2'-6" Laps
(7) Includes Two 2'-6" Laps

BAR SETS					BAR SETS				
MARK	MAX. LENGTH	MIN. LENGTH	NO. OF SETS	BARS PER SET	MARK	MAX. LENGTH	MIN. LENGTH	NO. OF SETS	BARS PER SET

STANDARD HOOK LENGTH

PRIMARY STRESS BARS			STIRRUPS AND TIES		
BAR SIZE	HOOK H 90°	HOOK H 180°	BAR SIZE	HOOK H 90°	HOOK H 135°
4	8"	6"	3	4"	4"
5	10"	7"	4	4 ½"	4 ½"
6	12"	8"	5	6"	5 ½"
7	15"	10"	6	12"	8"
8	17"	11"	7	14"	9"
9	19"	15"	8	16"	10 ½"
10	23"	17"			
11	24"	19"			

d = BAR SIZE
Dp = PIN DIAMETER

PIN DIAMETER

PRIMARY STRESS		STIRRUP & TIES	
BAR SIZE	Dp	BAR SIZE	Dp
4	3"	3	1 ½"
5	3 ¾"	4	2"
6	4 ½"	5	2 ½"
7	5 ¼"	6	4 ½"
8	6"	7	5 ¼"
9	9½"	8	6"
10	11"		
11	12"		

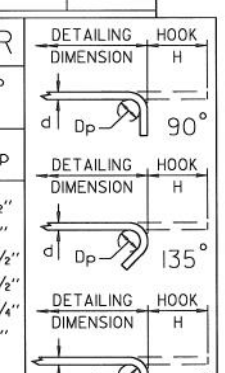

BENDING DIAGRAMS

ALL DIMENSIONS ARE OUT TO OUT & NOT TO SCALE
ALL REINFORCING STEEL SHALL BE EPOXY COATED

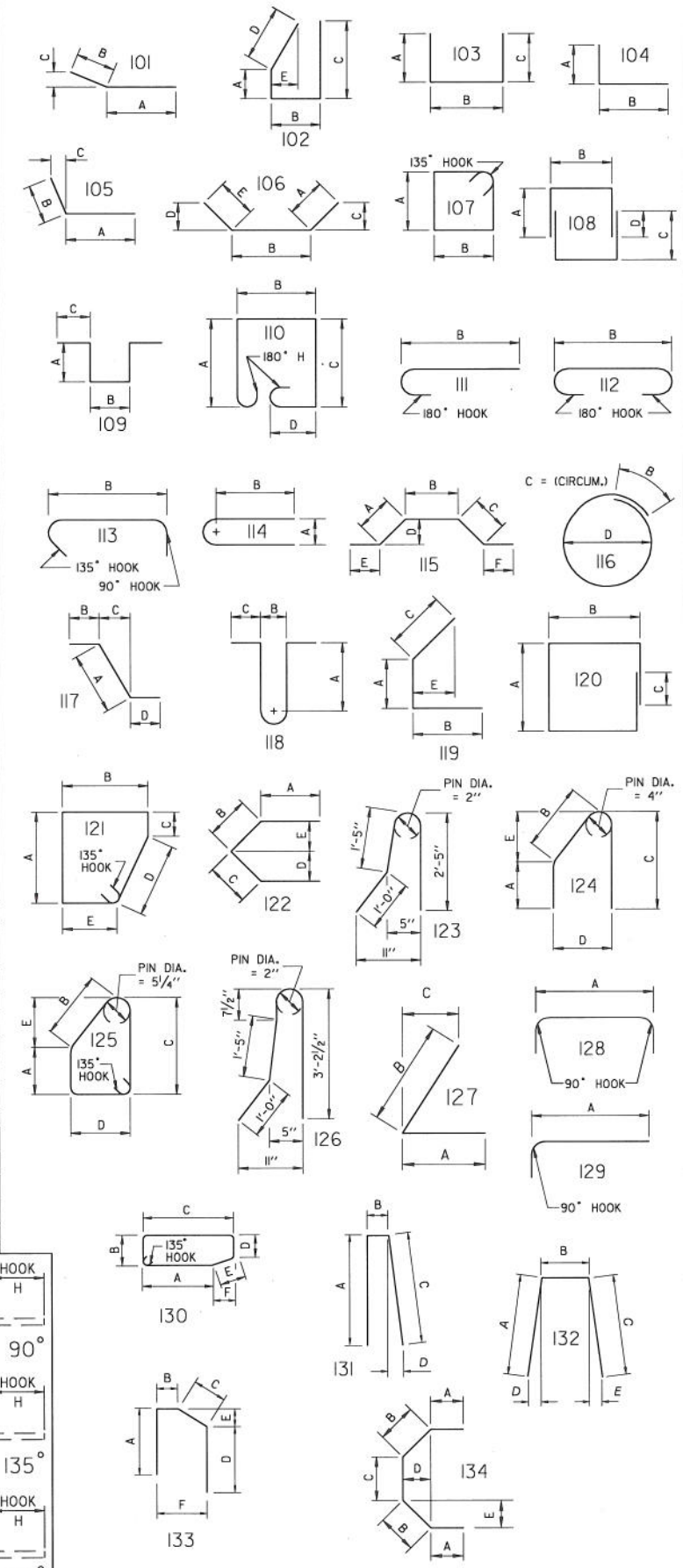

PROJECT NUMBER	34-7 (122)
SHEET NO.	
C.N.	22246
STRUCTURE NUMBER	

PROFESSIONAL STRUCTURAL ENGINEER — LYMAN D. FREEMON E-2005 — STATE OF NEBRASKA

BRIDGE ENGINEER

1416'-4½" 9-SPAN TRUSS
BRIDGE - REDECK AND REHAB
BILL OF BARS

LOCATION MISSOURI RIVER BRIDGE AT PLATTSMOUTH
SKEW 0°
ROADWAY 20'-0"
DESIGN LIVE LOAD

DATE
CHECKED BY
DETAILED BY
DESIGNED BY

COUNTY CASS
HWY. NO. U.S. 34
REF. POST.
STA.

STATE OF NEBRASKA - DEPARTMENT OF ROADS - BRIDGE DIVISION

Nebraska

SPECIAL PLAN NO.

plattsmouth4.dgn