- KEARNEY EAST BYPASS -

(11th Street to 56th Street)

PRELIMINARY

PROJECT NUMBER	SHEET NO.
10-2(116)	

C.N. 42103B

STRUCTURE NUMBER S010 05443 L&R

PROFESSIONAL CIVIL ENGINEER MARK J. TRAYNOWICZ E-8119 STATE OF NEBRASKA

BRIDGE ENGINEER

- NOTES -

This structure is designed in accordance with the AASHTO LRFD Bridge Design Specifications, Fifth Edition, including subsequent interim revisions.

The contractor may substitute any one of the alternate designs shown on the plans for the original design. All quantities are based on the original design and no additions or deductions will be allowed for the use of an alternate design.

The prestressed girders have been designed assuming 100% continuity at the interior supports for live load.

The cast-in-place concrete bridge deck is designed by the empirical design method.

The prestressed deck is designed for compliance with LRFD composite superstructure design.

The girders and substructure are designed for a future wearing surface of 20 psf.

Prestressed concrete girders must be at least 9 days old before they can be set on the bridge substructure. Surveying for shim shots, forming bridge deck, integral abutments, or diaphragms and placing construction material on the girder is not allowed until the girders are at least 30 days old. The shim shots may be taken before or after the integral abutments and diaphragms are poured. All girder lines and spans shall be set before the shim shots are taken. Shim shots are valid for 60 days. If the deck is not placed within 60 days, shim shots must be retaken, shims may be adjusted, and all costs shall be subsidiary to the Pay Item, "CLASS 47BD-4000 CONCRETE FOR BRIDGE".

The contractor must provide any temporary intermediate diaphragms and/or bracing necessary to provide lateral and torsional stability for the girders during construction of concrete slab. The temporary intermediate diaphragms/bracing shall be removed after the concrete slab has attained 75% of its design strength. The cost of furnishing, installing and removing the temporary intermediate diaphragms and/or bracing shall be subsidiary to the Pay Item, "CLASS 47BD-4000 CONCRETE FOR BRIDGE".

The superstructure is designed for the allowance of stay-in-place forms (5 lbs/ft^2) between girders.

Concrete for cast-in-place deck, diaphragms, approach slabs, and rails shall be Class "47BD", with a 28-day strength of 4,000 psi.

All other cast-in-place concrete shall be Class "47B" concrete with a 28-day strength of 4000 psi.

All reinforcing steel shall be epoxy coated and conform to the requirements of ASTM A615/A615M, Grade 60 steel.

The minimum clearance, measured from the face of the concrete to the surface of any reinforcing bar, shall be 3", except where otherwise noted.

All structural steel shall conform to the requirements of ASTM A709/A709M, Grade 36.

The Pay Item, "STRUCTURAL STEEL FOR SUBSTRUCTURE", shall include the tie rods and steel channels at the abutments.

Tie Rods shall conform to ASTM A709/A709M, Grade 36 Steel. Turnbuckles shall conform to ASTM A668/A668M, Class C.

After fabrication, tie rods shall be galvanized according to ASTM A123/A123M.

All dimensions shown are in horizontal plane only. No allowances have been made for vertical curve or roadway cross slope.

Girder shims that will be provided to the contractor account for the dead load deflection due to weight of the slab and rail only. The contractor is responsible for making the necessary adjustments for the particular forming system used to achieve the slab grades and elevations shown on the plans.

For bridges, where the entire slab is not expected to be placed in one day, the contractor may submit an alternate proposed slab pouring sequence to the Bridge Division at the preconstruction conference so that new camber and shims may be calculated.

No form work, reinforcing steel, or construction loads shall be placed on the girders (concrete girders need to be 30 days and have reached their design strength) until the abutment concrete has set for 72 hours or reached a minimum compressive strength of 2,000 psi.

The locations of all aerial and underground utility facilities may not be indicated in these plans. Underground utilities, whether indicated or not will be located and flagged by the Utilities at the request of the contractor.

No excavation will be permitted in the area of underground facilities until all such facilities have been located and identified to the satisfaction of all parties. The excavation must be accomplished with extreme care in order to avoid any possibility of damage to the utility facility.

Frontier Communications shall furnish all PVC sleeves, conduit, inserts and hardware required for the utility attachment to the bridge. All material to be installed by the bridge contractor shall be delivered to the bridge site by the utility company within 72 hours after notification from the bridge contractor. The contact person for Frontier Communications is Mr. Dennis Clapper and can be reached at (308) 236-6458.

All plastic pipe, galvanized wire screen and miscellaneous drainage items at the abutments shall be considered subsidiary to the Pay Item, "SUBSURFACE DRAINAGE MATTING".

The Contractor shall install the sleeves and inserts as shown on the plans. The Contractor shall install the conduit from the face of the abutment to the toe of the slopes under the approach slabs, but will not be required to install the hangers and conduit between abutments. The installation by the bridge contractor will not be paid for directly but shall be subsidiary to the Pay Item "CLASS 47BD-4000 CONCRETE FOR BRIDGE."

- QUANTITIES -

	Group 6 NORTHBOUND		Group 6A SOUTHBOUND	
ABUTMENT NO. 1 EXCAVATION		1 LS		1 LS
PIER NO. 1 EXCAVATION		1 LS		1 LS
ABUTMENT NO. 2 EXCAVATION		1 LS		1 LS
CLASS 47B-4000 CONCRETE FOR BRIDGE		315.8 CY		315.8 CY
ABUTMENTS	151.8 CY		151.8 CY	
PIER	164.0 CY		164.0 CY	
CLASS 47BD-4000 CONCRETE FOR BRIDGE		114.3 CY		498.6 CY
SLAB	---		334.6 CY	
HAUNCHES	---		49.7 CY	
CONCRETE RAILS	86.6 CY		86.6 CY	
DIAPHRAGM	27.7 CY		27.7 CY	
PRECAST/PRESTRESSED CONCRETE SUPERSTRUCTURE AT STATION 148+18.22		1 LS		1 LS
GIRDERS	365.7 CY		365.7 CY	
EPOXY COATED REINFORCING STEEL		103155 LB		211365 LB
SLAB	2050 LB		109795 LB	
CONCRETE RAILS	35810 LB		35810 LB	
ABUTMENTS	19465 LB		19930 LB	
PIER	45830 LB		45830 LB	
STEEL DIAPHRAGM		8 EA		8 EA
STRUCTURAL STEEL FOR SUBSTRUCTURE		4755 LB		4755 LB
PIPE PILING		7100 LF		7100 LF
TEST PILE		3 EA		3 EA
FIXED BEARING		10 EA		10 EA
GRANULAR BACKFILL		480 CY		480 CY
SUBSURFACE DRAINAGE MATTING		87 SY		87 SY
CONCRETE FOR PAVEMENT APPROACHES CLASS 47BD-4000		189.5 CY		188.8 CY
SLABS	175.9 CY		175.2 CY	
CONCRETE RAILS	13.6 CY		13.6 CY	
EPOXY COATED REINFORCING STEEL FOR PAVEMENT APPROACHES		35220 LB		35030 LB
SLABS	28880 LB		28690 LB	
CONCRETE RAILS	6340 LB		6340 LB	
PREFORMED EXPANSION JOINT, TYPE A		89.7 LF		89.7 LF
1½" CONDUIT IN BRIDGE		---		436 LF
7' PEDESTRIAN RAILING (CHAIN LINK TYPE)		670 LF		670 LF
NU-DECK PANELS		1 LS		---
CONCRETE CLASS "47BD"	331.8 CY			
REINFORCING STEEL	55195 LB			
STRUCTURAL STEEL FOR TYPE "A" AND "B" POCKETS	7590 LB			
PRESTRESSING STRANDS	8945 LB			
4" CONDUIT ON STRUCTURE		---		421 LF
CONCRETE SLOPE PROTECTION		87 SY		87 SY
POST-TENSIONING		1 LS		---
DIAMOND GRINDING AND TEXTURING CONCRETE BRIDGE DECK		1451 SY		---

Shop plans for record
Stay-In-Place forms

Shop plans for review
Prestressed Concrete Superstructure
Superstructure Steel
Substructure Steel

Bearing Devices
Pedestrian Railing (Chain Link Type)

- INDEX -

GENERAL NOTES, QUANTITIES, & INDEX	1
ELEVATION OF BRIDGE	2
GENERAL PLAN OF BRIDGE	3
COORDINATE LAYOUT	4
COORDINATE DATA	5
GEOLOGICAL PROFILE	6
PILE LAYOUT	7
PILE LAYOUT	8
PILE DATA	9
TRACK PROTECTION SHORING	10
PLAN VIEW OF ABUTMENT (SHOWING DIMENSIONS)	11
PLAN VIEW OF ABUTMENT (SHOWING REINFORCEMENT)	12
ELEVATION VIEW OF ABUTMENT	13
ABUTMENT AND TIE ROD DETAILS	14
WING DETAILS	15
GRADE BEAM DETAILS	16
ABUTMENT DETAILS (NORTHBOUND BRIDGE)	17
ABUTMENT BILL OF BARS	18
ELEVATION OF PIER NO. 1	19
PLAN VIEW OF PIER NO. 1	20
PIER FOOTING DETAILS	21
PIER SECTIONS	22
PIER BILL OF BARS	23
GIRDER DATA (SOTHBOUND BRIDGE)	24
GIRDER DATA (NORTHBOUND BRIDGE)	25
GIRDER LAYOUT	26
GIRDER ELEVATION (NORTHBOUND BRIDGE)	27
CROSS SECTION OF ROADWAY AT MID-SPAN	28
DIAPHRAGM DETAILS	29
SECTION OF DIAPHRAGMS AND BEARING DETAILS	30
NU DECK PANEL DETAIL AND NOTES	31 / 31A
END OF FLOOR DECK PANEL DETAILS	32
NU DECK PANEL DETAILS	33
DIAPHRAGM DETAILS (NORTHBOUND BRIDGE)	34
LUMINAIRE DETAILS	35
UTILITY CONDUIT DETAILS	36
NU DECK PANEL LAYOUT	37
SLAB REINFORCEMENT LAYOUT FOR CAST-IN-PLACE DECK	38
SLAB REINFORCEMENT DETAILS	39
DECK PANEL RAIL BAR AND INSERT LOCATIONS	40
PLAN VIEW OF APPROACH SLAB (NORTHBOUND STRUCTURE)	41
SLAB AND RAIL ON BRIDGE BILL OF BARS	42
APPROACH SLAB	43
CONCRETE RAIL ON APPROACH SLAB	44
BILL OF BARS - APPROACH SLAB	45
CHAIN LINK FENCE DETAILS	46
ALTERNATE CHAIN LINK FENCE DETAILS	47
GRANULAR BACKFILL AND DRAINAGE DETAILS	48

LOCATION KEARNEY EAST BYPASS
SKEW 14° LHB (11th ST. TO 56th ST.)
ROADWAY 39'-0"
DESIGN LIVE LOAD HL-93

332'-0" 2-SPAN PRESTRESSED (NU1800) GIRDER BRIDGE
GENERAL NOTES, QUANTITIES & INDEX

COUNTY BUFFALO
HWY. NO. N-10
REF. POST. 54.43
STA. 148+18.22

DESIGNED BY SS
DETAILED BY MR
CHECKED BY MJA
DATE APRIL 2013

STATE OF NEBRASKA - DEPARTMENT OF ROADS - BRIDGE DIVISION

NDOR Nebraska Department of Roads

PROFESSIONAL STRUCTURAL ENGINEER M.J. STEVE SABRA E-8112 STATE OF NEBRASKA

SPECIAL PLAN NO. 1

File: c010 05443l&r_a.dgn Date: 13-AUG-2013 14:06 User: dor2062 Computer: DRBRIDGE29

Stations and grade elevations shown are along ℄ Roadways.

PRELIMINARY

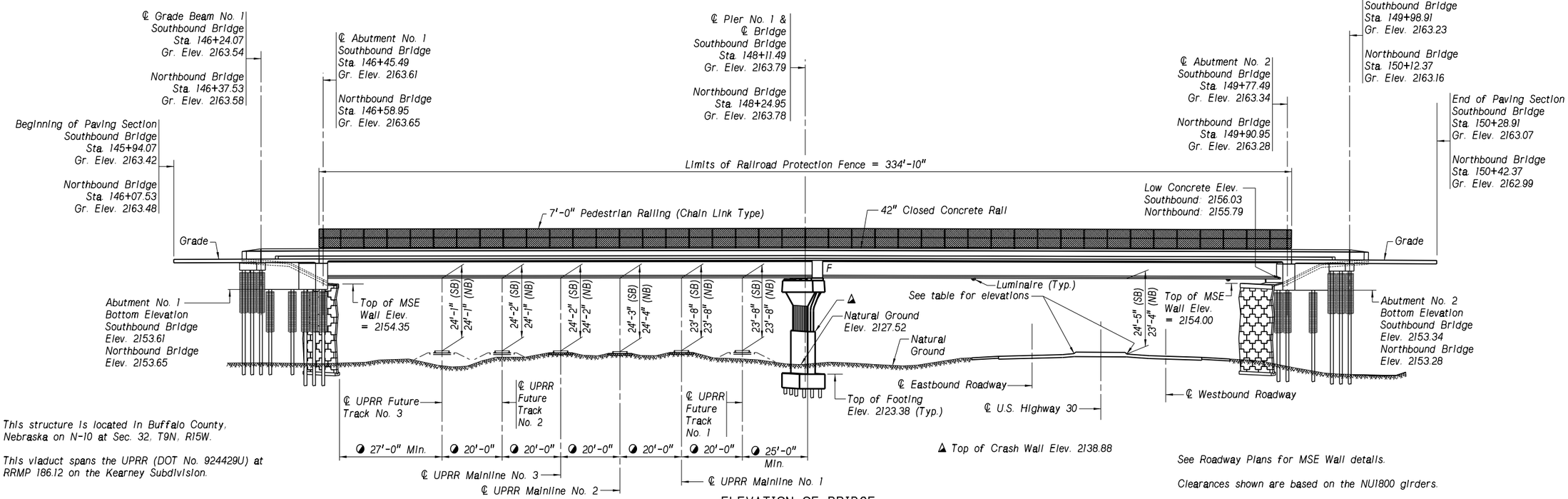

ELEVATION OF BRIDGE

Southbound Bridge Shown. Northbound Bridge Similar
Not to Scale

This structure is located in Buffalo County, Nebraska on N-10 at Sec. 32, T9N, R15W.

This viaduct spans the UPRR (DOT No. 924429U) at RRMP 186.12 on the Kearney Subdivision.

See Roadway Plans for MSE Wall details.

Clearances shown are based on the NU1800 girders.

◑ Dimensions measured perpendicular to ℄ UPRR Tracks

TRAFFIC DATA		
YEAR	2013	2033
ADT	9380	12620
DHV	990	1330
HEAVY TRUCKS	6 %	6 %

★ TOP OF TRACK ELEVATIONS		
Track	Southbound @ Girder "A"	Northbound @ Girder "K"
Future Track No. 1	2132.88	2132.89
Mainline Track No. 1	2132.88	2132.89
Mainline Track No. 2	2132.24	2132.21
Mainline Track No. 3	2132.28	2132.38
Future Track No. 2	2132.28	2132.38
Future Track No. 3	2132.28	2132.38

★ U.S. HIGHWAY 30 ELEVATIONS AT THE TOE OF THE MEDIAN		
	Southbound @ Girder "A"	Northbound @ Girder "K"
Eastbound Roadway	2131.90	2132.88
Westbound Roadway	2131.90	2132.88

★ The elevations at the toe of the median along US Highway 30 and the top of rails shall be verified in the field before beginning construction of the bridge. If the elevations are not as shown on the plans, the Project Manager shall contact the Bridge Division.

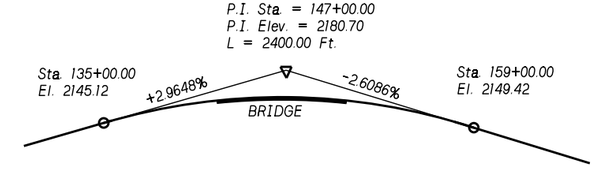

VERTICAL ALIGNMENT ALONG PROFILE GRADE LINE (P.G.L.)

Not to Scale

The Profile Grade Line is offset 15'-0" Left and Right from the ℄ of Project.

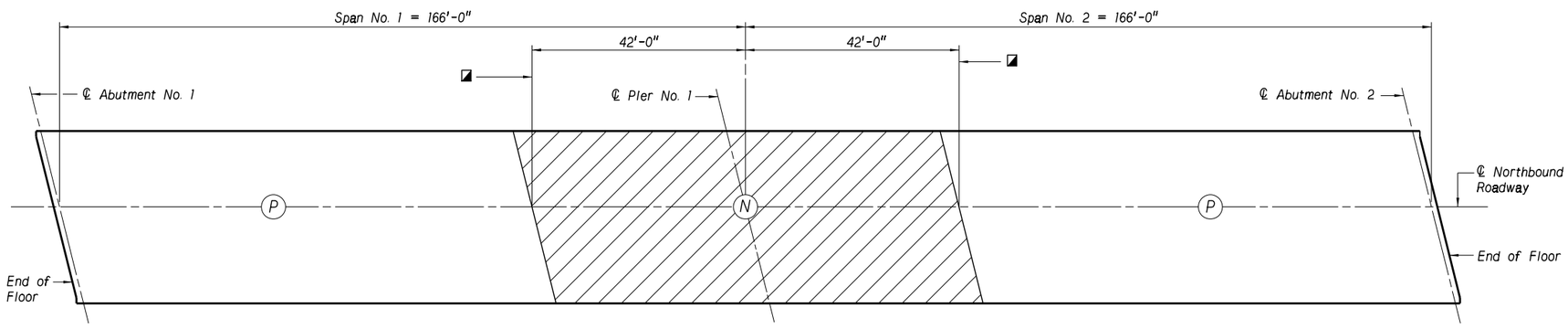

POURING DIAGRAM

Southbound Bridge Only
Not to Scale

◪ Optional Construction Joints (Pour in direction of arrows)

POURING SEQUENCE:

The entire slab shall be poured starting at either end and proceeding to the other end, stopping at the completion of any "P" section.

(P)=Positive moment section
(N)=Negative moment section

PROJECT NUMBER	SHEET NO.
10-2(116)	

C.N. 42103B

STRUCTURE NUMBER
S010 05443 L&R

PROFESSIONAL CIVIL ENGINEER MARK J. TRAYNOWICZ E-8119 STATE OF NEBRASKA

BRIDGE ENGINEER

332'-0" 2-SPAN PRESTRESSED (NU1800) GIRDER BRIDGE
ELEVATION OF BRIDGE

COUNTY BUFFALO
HWY. NO. N-10
REF. POST. 54.43
STA. 148+18.22

LOCATION KEARNEY EAST BYPASS (11th ST. TO 56th ST.)
SKEW 14° LHB
ROADWAY 39'-0"
DESIGN LIVE LOAD HL-93

DATE APRIL 2013
CHECKED BY MJA
DETAILED BY MR
DESIGNED BY SS

STATE OF NEBRASKA - DEPARTMENT OF ROADS - BRIDGE DIVISION

NDOR Nebraska Department of Roads

PROFESSIONAL STRUCTURAL ENGINEER M.J. STEVE SABRA E-8112 STATE OF NEBRASKA

SPECIAL PLAN NO. 1

2 / 48

File: c010 05443l&r_o.dgn Date: 02-JUL-2013 10:52 User: dor2062 Computer: DRBRIDGE29

Stations shown are along ℄ Roadways.

This structure is located in Buffalo County, Nebraska on N-10 at Sec. 32, T9N, R15W.

This viaduct spans the UPRR (DOT No. 924429U) at RRMP 186.12 on the Kearney Subdivision.

PRELIMINARY

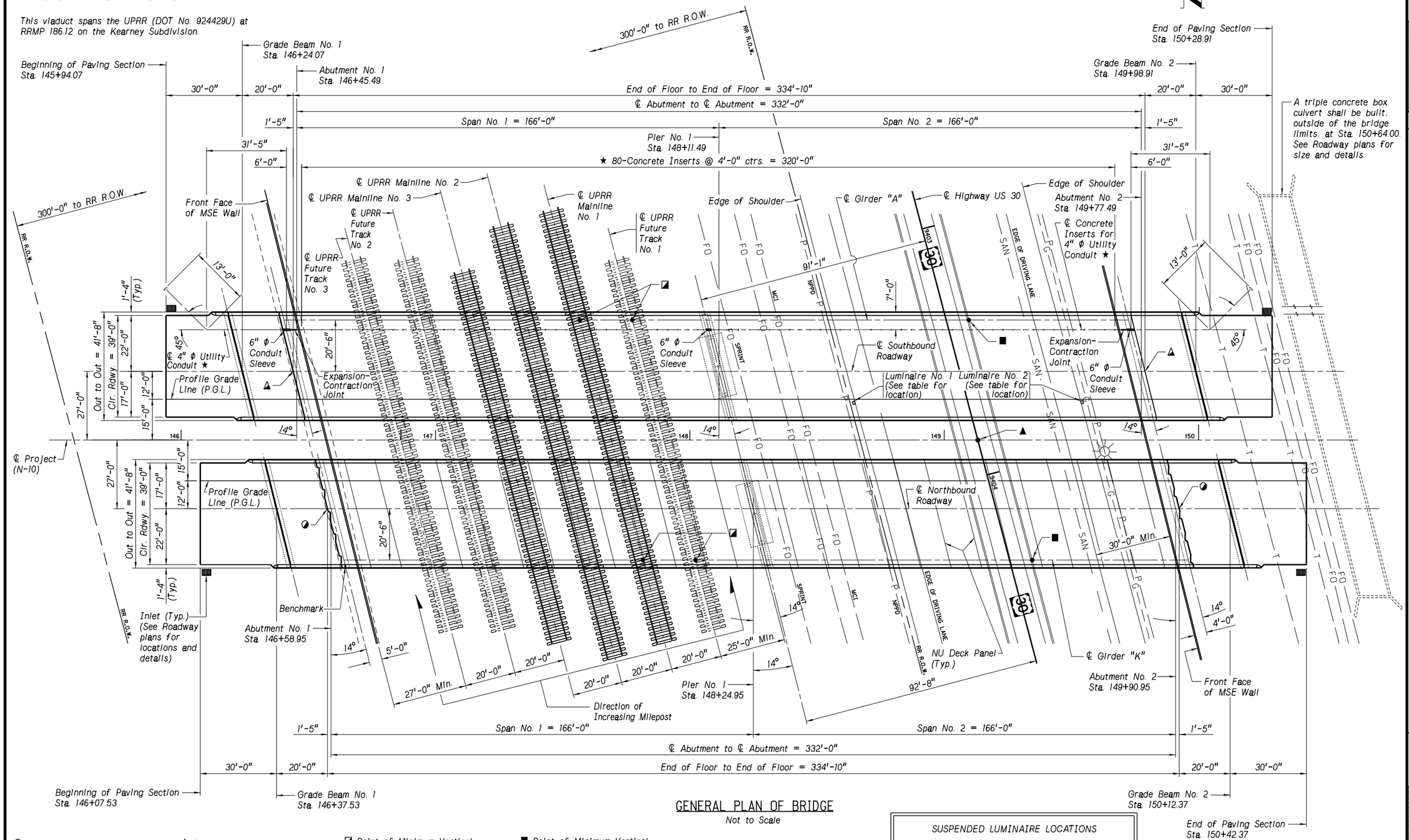

GENERAL PLAN OF BRIDGE

Not to Scale

◐ Northbound Roadway

End of Floor (Abut. No. 1) Sta. 146+57.53

End of Floor (Abut. No. 2) Sta. 149+92.37

◭ Southbound Roadway

End of Floor (Abut. No. 1) Sta. 146+44.07

End of Floor (Abut. No. 2) Sta. 149+78.91

◪ Point of Minimum Vertical Clearance at Top of Rail

Southbound at Girder "A" Sta. 147+62.00 and 147+82.68
Northbound at Girder "K" Sta. 147+81.62 and 148+02.30

■ Point of Minimum Vertical Clearance on Toe of Median along US Highway 30

Southbound at Girder "A" Sta. 149+09.56
Northbound at Girder "K" Sta. 149+34.66

▲ ℄ N-10 Sta. 149+13.20 = ℄ U.S. 30 Sta. 9403+85.84

★ See sheet 36 of 48 for Utility Conduit details.

SUSPENDED LUMINAIRE LOCATIONS		
	Station	Offset from ℄ Project
Luminaire No. 1	148+64.81	13'-6" Lt.
Luminaire No. 2	149+54.51	13'-6" Lt.

See sheet 35 of 48 for Suspended Luminaire details.

PROJECT NUMBER	SHEET NO.
10-2(116)	

C.N. 42103B

STRUCTURE NUMBER S010 05443 L&R

PROFESSIONAL CIVIL ENGINEER MARK J. TRAYNOWICZ E-8119 STATE OF NEBRASKA

BRIDGE ENGINEER

332'-0" 2-SPAN PRESTRESSED (NU1800) GIRDER BRIDGE
GENERAL PLAN OF BRIDGE

COUNTY BUFFALO
HWY. NO. N-10
REF. POST. 54.43
STA. 148+18.22

LOCATION KEARNEY EAST BYPASS
SKEW 14° LHB (11th ST. TO 56th ST.)
ROADWAY 39'-0"
DESIGN LIVE LOAD HL-93

DATE APRIL 2013

DESIGNED BY SS
DETAILED BY MR
CHECKED BY MJA

STATE OF NEBRASKA - DEPARTMENT OF ROADS - BRIDGE DIVISION

NDOR Nebraska Department of Roads

PROFESSIONAL STRUCTURAL ENGINEER M.J. STEVE SABRA E-8112 STATE OF NEBRASKA

SPECIAL PLAN NO. 1

File: c010 05443&r_a.dgn Date: 02-JUL-2013 10:51 User: dor2062 Computer: DRBRIDGE29

PRELIMINARY

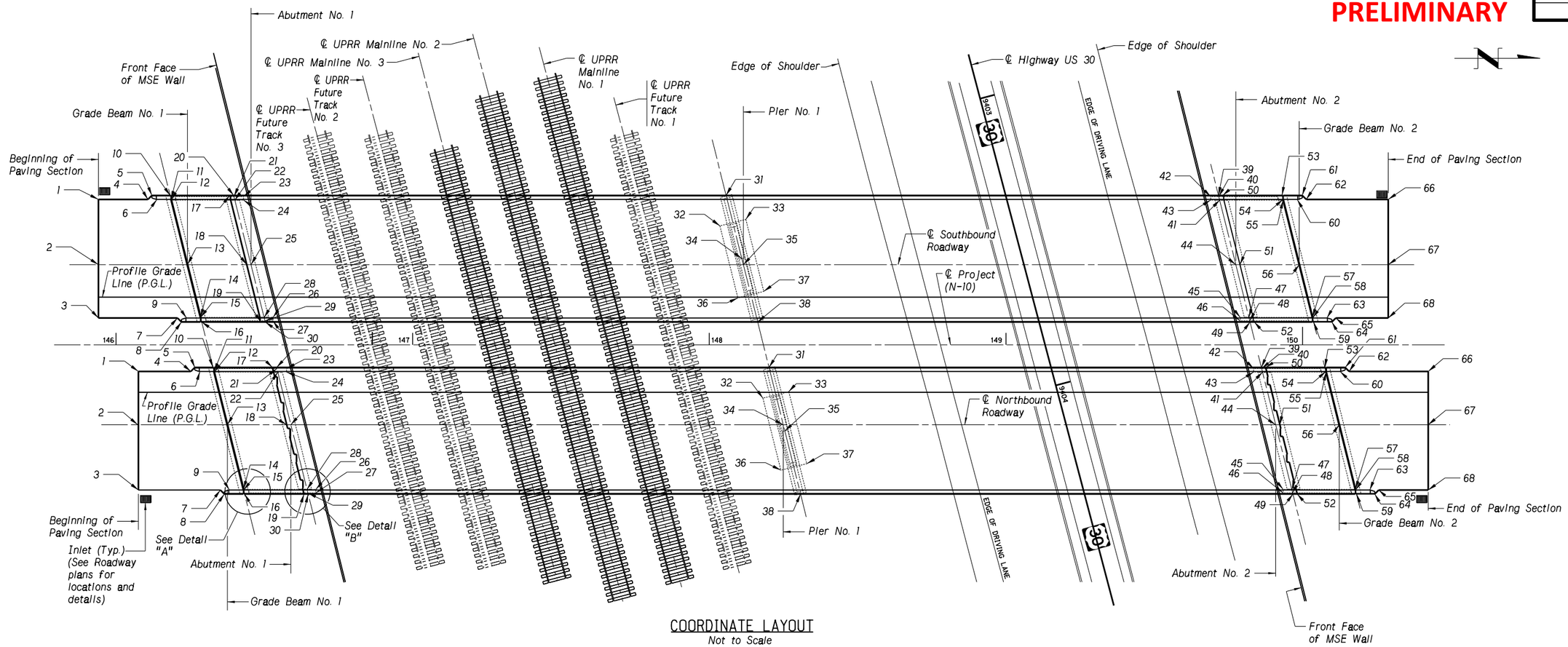

COORDINATE LAYOUT

Not to Scale

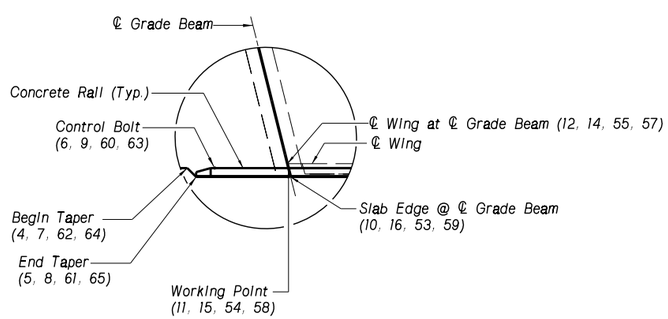

DETAIL "A"

Coordinate Designations are Identical on Northbound and Southbound Structures All Corners Similar

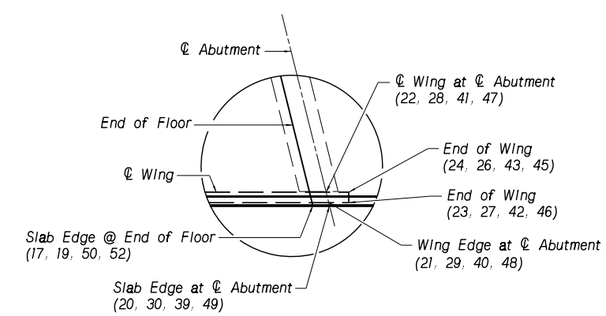

DETAIL "B"

Coordinate Designations are Identical on Northbound and Southbound Structures All Corners Similar

ALIGNMENT CONTROL POINTS

POINT NO.	STATION	OFFSET TO STA. (FT.)	X COORDINATE	Y COORDINATE
1	145+00	0.00	1910156.2031	319522.6637
2	151+00	0.00	1910130.6252	320122.1183

DATUM INFORMATION

HORIZONTAL	VERTICAL
NAD 83 (1995)	NAVD 88

D.A.F. = 1.0003354

PROJECT NUMBER	SHEET NO.
10-2(116)	

C.N. 42103B

STRUCTURE NUMBER S010 05443 L&R

PROFESSIONAL CIVIL ENGINEER MARK J. TRAYNOWICZ E-8119 STATE OF NEBRASKA

BRIDGE ENGINEER

332'-0" 2-SPAN PRESTRESSED (NU1800) GIRDER BRIDGE

COORDINATE LAYOUT

COUNTY BUFFALO
HWY. NO. N-10
REF. POST. 54.43
STA. 148+18.22

LOCATION KEARNEY EAST BYPASS
SKEW 14° LHB (11th ST. TO 56th ST.)
ROADWAY 39'-0"
DESIGN LIVE LOAD HL-93

DATE APRIL 2013

DESIGNED BY SS
DETAILED BY MR
CHECKED BY MJA

STATE OF NEBRASKA - DEPARTMENT OF ROADS - BRIDGE DIVISION

NDOR Nebraska Department of Roads

PROFESSIONAL STRUCTURAL ENGINEER M.J. STEVE SABRA E-8112 STATE OF NEBRASKA

SPECIAL PLAN NO. 1

File: s010 05443l&r_a.dgn Date: 02-JUL-2013 10:53 User: dor2062 Computer: DRBRIDGE29

PRELIMINARY

COORDINATES, STATIONING & OFFSETS (SOUTHBOUND STRUCTURE)

POINT	STATION	OFFSET TO STA. (FT.)	X COORDINATE	Y COORDINATE	POINT	STATION	OFFSET TO STA. (FT.)	X COORDINATE	Y COORDINATE	POINT	STATION	OFFSET TO STA. (FT.)	X COORDINATE	Y COORDINATE	POINT	STATION	OFFSET TO STA. (FT.)	X COORDINATE	Y COORDINATE
1	145+94.07	-49.00	1910103.24	319614.56	18	146+44.07	-27.00	1910123.09	319665.45	35	148+11.49	-27.00	1910115.95	319832.72	52	149+83.48	-8.67	1910126.93	320005.34
2	145+94.07	-27.00	1910125.22	319615.50	19	146+48.64	-8.67	1910141.21	319670.80	36	148+06.92	-15.38	1910127.76	319828.65	53	149+93.09	-50.33	1910084.90	320013.16
3	145+94.07	-10.00	1910142.20	319616.22	20	146+39.67	-50.33	1910099.96	319660.06	37	148+20.98	-18.88	1910123.65	319842.55	54	149+93.42	-49.00	1910086.21	320013.55
4	146+10.75	-49.00	1910102.53	319631.23	21	146+39.75	-50.00	1910100.29	319660.16	38	148+16.06	-8.67	1910134.07	319838.07	55	149+93.46	-48.83	1910086.38	320013.60
5	146+12.08	-50.33	1910101.14	319632.50	22	146+40.04	-48.83	1910101.44	319660.50	39	149+71.67	-50.33	1910085.81	319991.76	56	149+98.91	-27.00	1910107.96	320019.97
6	146+13.83	-49.00	1910102.39	319634.51	23	146+42.55	-50.00	1910100.15	319662.96	40	149+71.75	-50.00	1910086.14	319991.86	57	150+03.11	-10.17	1910124.60	320024.88
7	146+20.47	-10.00	1910141.08	319642.60	24	146+42.55	-48.83	1910101.32	319663.05	41	149+72.04	-48.83	1910087.29	319992.20	58	150+03.14	-10.00	1910124.78	320024.92
8	146+21.81	-8.67	1910142.35	319643.99	25	146+45.49	-27.00	1910123.03	319666.87	42	149+69.54	-50.00	1910086.23	319989.64	59	150+03.48	-8.67	1910126.08	320025.32
9	146+23.56	-10.00	1910140.94	319645.68	26	146+52.19	-10.17	1910139.54	319674.29	43	149+69.54	-48.83	1910087.40	319989.70	60	149+98.17	-49.00	1910086.01	320018.30
10	146+18.25	-50.33	1910100.87	319638.66	27	146+52.19	-9.00	1910140.71	319674.33	44	149+77.49	-27.00	1910108.87	319998.57	61	149+99.92	-50.33	1910084.60	320019.99
11	146+18.58	-49.00	1910102.19	319639.05	28	146+49.69	-10.17	1910139.66	319671.78	45	149+79.18	-10.17	1910125.62	320000.98	62	150+01.26	-49.00	1910085.88	320021.38
12	146+18.63	-48.83	1910102.21	319639.10	29	146+49.98	-8.67	1910140.52	319672.12	46	149+79.18	-9.00	1910126.78	320001.03	63	150+07.90	-10.00	1910124.56	320029.67
13	146+24.07	-27.00	1910123.94	319645.47	30	146+50.06	-8.67	1910141.15	319672.22	47	149+81.69	-10.17	1910125.51	320003.48	64	150+09.65	-8.67	1910125.82	320031.48
14	146+28.27	-10.00	1910140.58	319650.38	31	148+05.67	-50.33	1910092.88	319825.91	48	149+81.98	-9.00	1910126.66	320003.82	65	150+10.98	-10.00	1910124.43	320032.75
15	146+28.31	-10.00	1910140.74	319650.43	32	148+00.75	-40.13	1910103.30	319821.43	49	149+82.06	-8.67	1910126.99	320003.92	66	150+28.91	-49.00	1910084.70	320049.00
16	146+28.64	-8.67	1910142.06	319650.82	33	148+14.80	-43.63	1910099..20	319835.33	50	149+73.09	-50.33	1910085.75	319993.18	67	150+28.91	-27.00	1910106.68	320049.94
17	146+38.25	-50.33	1910100.02	319658.64	34	148+10.87	-29.50	1910113.48	319831.99	51	149+78.91	-27.00	1910108.81	319999.99	68	150+28.91	-10.00	1910123.66	320050.67

COORDINATES, STATIONING & OFFSETS (NORTHBOUND STRUCTURE)

POINT	STATION	OFFSET TO STA. (FT.)	X COORDINATE	Y COORDINATE	POINT	STATION	OFFSET TO STA. (FT.)	X COORDINATE	Y COORDINATE	POINT	STATION	OFFSET TO STA. (FT.)	X COORDINATE	Y COORDINATE	POINT	STATION	OFFSET TO STA. (FT.)	X COORDINATE	Y COORDINATE
1	146+07.53	10.00	1910161.61	319630.52	18	146+57.53	27.00	1910176.46	319681.20	35	148+25.57	29.50	1910171.80	319849.20	52	149+98.19	50.33	1910185.25	320022.54
2	146+07.53	27.00	1910178.59	319631.25	19	146+63.35	50.33	1910199..53	319688.01	36	148+21.63	43.63	1910186.08	319845.85	53	150+07.80	8.67	1910143.92	320030.37
3	146+07.53	49.00	1910200.57	319632.18	20	146+64.38	8.67	1910158.28	319877.27	37	148+35.69	40.13	1910181.97	319859.76	54	150+08.13	10.00	1910144.53	320030.76
4	146+25.46	10.00	1910160.85	319648.43	21	146+64.46	9.00	1910158.61	319677.37	38	148+30.77	50.33	1910192.39	319855.28	55	150+08.17	10.17	1910144.70	320030.81
5	146+26.79	8.67	1910159.46	319648.71	22	146+54.75	10.00	1910159.76	319677.71	39	149+86.38	8.67	1910144.13	320008.97	56	150+12.37	27.00	1910161.34	320035.72
6	146+28.54	10.00	1910160.71	319651.51	23	146+57.26	9.00	1910158.49	319680.16	40	149+86.46	9.00	1910144.46	320009.07	57	150+17.82	48.83	1910182.92	320042.09
7	146+35.18	49.00	1910199.40	319659.81	24	146+57.26	10.17	1910159.66	319680.21	41	149+86.75	10.17	1910145.61	320009.41	58	150+17.85	49.00	1910183.10	320042.13
8	146+36.52	50.33	1910200.67	319661.20	25	146+58.95	27.00	1910176.40	319682.62	42	149+84.25	9.00	1910144.55	320006.86	59	150+18.19	50.33	1910184.40	320042.53
9	146+38.27	49.00	1910199.26	319662.89	26	146+66.90	48.83	1910197.88	319691.49	43	149+84.25	10.17	1910145.71	320006.90	60	150+12.88	10.00	1910144.33	320035.51
10	146+32.96	8.67	1910159.19	319655.87	27	146+66.90	50.00	1910199.05	319691.54	44	149+90.95	27.00	1910162.25	320014.32	61	150+14.63	8.67	1910142.92	320037.20
11	146+33.29	10.00	1910160.51	319656.26	28	146+64.40	48.83	1910197.98	319688.99	45	149+93.89	48.83	1910183.94	320018.19	62	150+15.97	10.00	1910144.20	320038.59
12	146+33.33	10.17	1910160.68	319656.31	29	146+64.69	50.00	1910199.14	319689.43	46	149+93.89	50.00	1910185.10	320018.23	63	150+22.61	49.00	1910182.88	320046.88
13	146+37.53	27.00	1910177.32	319661.22	30	146+64.77	50.33	1910199.47	319689.43	47	149+96.40	48.83	1910183.83	320020.69	64	150+24.36	50.33	1910184.14	320040.69
14	146+42.98	49.00	1910198.90	319667.59	31	148+20.38	8.67	1910151.20	319843.12	48	149+96.69	50.00	1910184.98	320021.03	65	150+25.69	49.00	1910182.75	320049.96
15	146+43.02	49.00	1910199.06	319667.64	32	148+15.46	18.83	1910161.62	319838.64	49	149+96.77	50.33	1910185.31	320021.13	66	150+42.37	10.00	1910143.07	320064.97
16	146+43.35	50.33	1910200.38	319668.03	33	148+29.52	15.38	1910157.52	319852.54	50	149+87.80	8.67	1910144.07	320010.39	67	150+42.37	27.00	1910160.06	320065.69
17	146+52.96	8.67	1910158.34	319675.85	34	148+24.95	27.00	1910169.33	319848.47	51	149+92.37	27.00	1910162.19	320015.74	68	150+42.37	49.00	1910182.04	320066.63

See sheet 4 of 48 for Coordinate point locations.

PROJECT NUMBER 10-2(116) | SHEET NO.

C.N. 42103B

STRUCTURE NUMBER S010 05443 L&R

PROFESSIONAL CIVIL ENGINEER MARK J. TRAYNOWICZ E-8119 STATE OF NEBRASKA

BRIDGE ENGINEER

332'-0" 2-SPAN PRESTRESSED (NU1800) GIRDER BRIDGE

COORDINATE DATA

DATE APRIL 2013

CHECKED BY MJA

LOCATION KEARNEY EAST BYPASS LHB (11th ST. TO 56th ST.)

SKEW 14° | ROADWAY 39'-0" | DESIGN LIVE LOAD HL-93

DETAILED BY MR

COUNTY BUFFALO | HWY. NO. N-10 | REF. POST. 54.43 | STA. 148+18.22

DESIGNED BY SS

STATE OF NEBRASKA - DEPARTMENT OF ROADS - BRIDGE DIVISION

NDOR Nebraska Department of Roads

PROFESSIONAL STRUCTURAL ENGINEER M.J. STEVE SABRA E-8112 STATE OF NEBRASKA

SPECIAL PLAN NO. 1

File: c010 05443l&r_a.dgn Date: 02-JUL-2013 10:54 User: dor2062 Computer: DRBRIDGE29

PRELIMINARY

PROJECT NUMBER	SHEET NO.
10-2(116)	

C.N. 42103B

STRUCTURE NUMBER S010 05443 L&R

BRIDGE ENGINEER

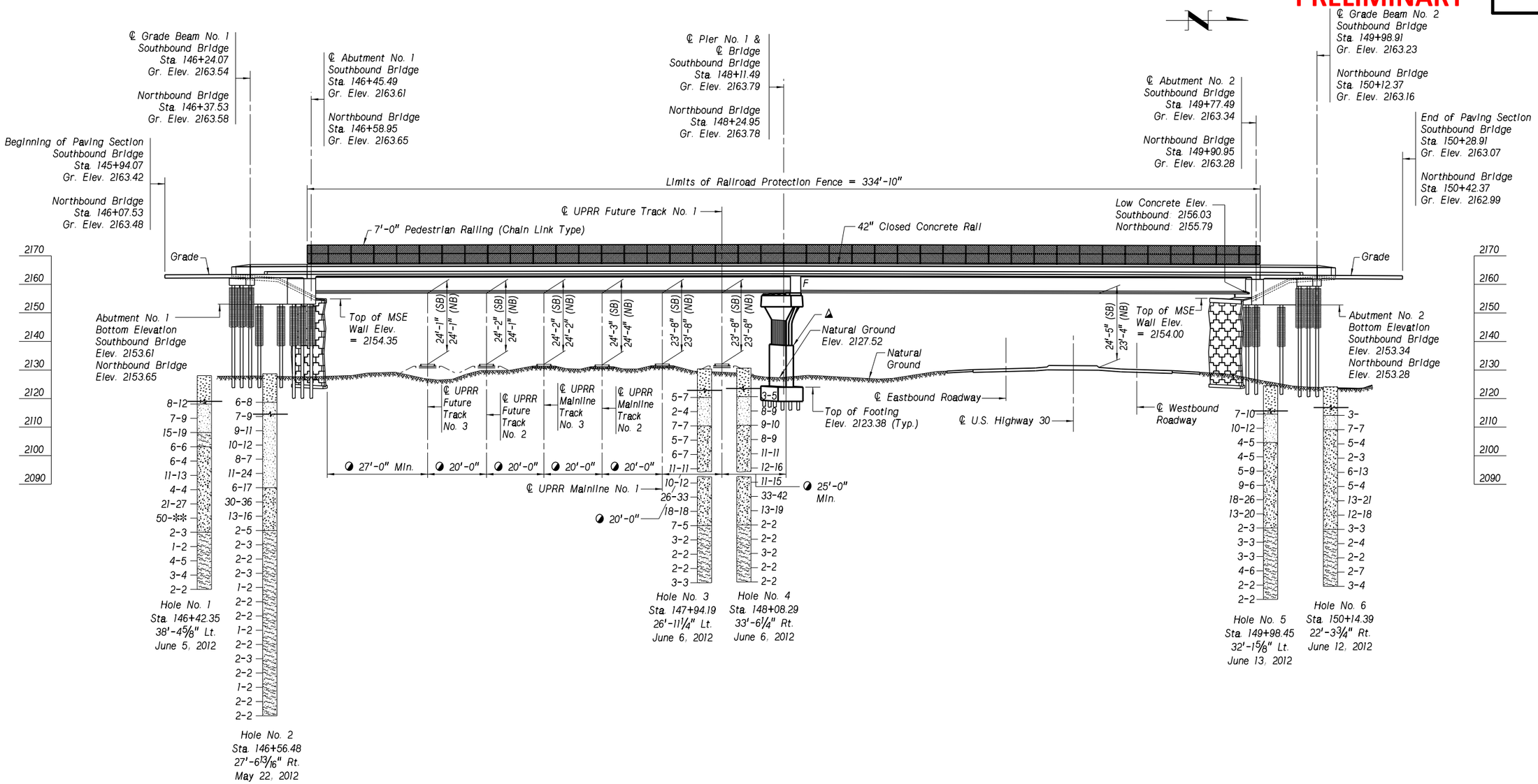

Topsoil (Black Dirt) | Sand | Silt | Gravel | Water Level (Immediately after Drilling) | ✻ More than 100 Blows

The borings, as logged on the plans, represent the character of the subsoil at the location indicated. No guarantee is made that the subsoil conditions vary uniformly between or outside the given location.

Figures beside the column of borings indicate the number of blows required to drive a standard penetrometer, of 2" O.D., the second and third 6" using a 140 lb weight falling 30", in accordance with A.S.T.M. D1586 procedures.

GEOLOGICAL PROFILE

Southbound Bridge Shown, Northbound Bridge Similar
Not to Scale

PROFESSIONAL CIVIL ENGINEER MARK J. TRAYNOWICZ E-8119 STATE OF NEBRASKA

PROFESSIONAL CIVIL ENGINEER JORDAN L. LARSEN E-12450 STATE OF NEBRASKA

PROFESSIONAL STRUCTURAL ENGINEER M.J. STEVE SABRA E-8112 STATE OF NEBRASKA

COUNTY BUFFALO
HWY. NO. N-10
REF. POST. 54.43
STA. 148+18.22

LOCATION KEARNEY EAST BYPASS (11th ST. TO 56th ST.)
SKEW 14° LHB
ROADWAY 39'-0"
DESIGN LIVE LOAD HL-93

332'-0" 2-SPAN PRESTRESSED (NU1800) GIRDER BRIDGE
GEOLOGICAL PROFILE

DESIGNED BY SS | DETAILED BY MR | CHECKED BY MJA | DATE APRIL 2013

STATE OF NEBRASKA - DEPARTMENT OF ROADS - BRIDGE DIVISION

NDOR Nebraska Department of Roads

SPECIAL PLAN NO. 1

File: c010 05443br_a.dgn Date: 02-JUL-2013 10:55 User: dor2062 Computer: DRBRIDGE29

PRELIMINARY

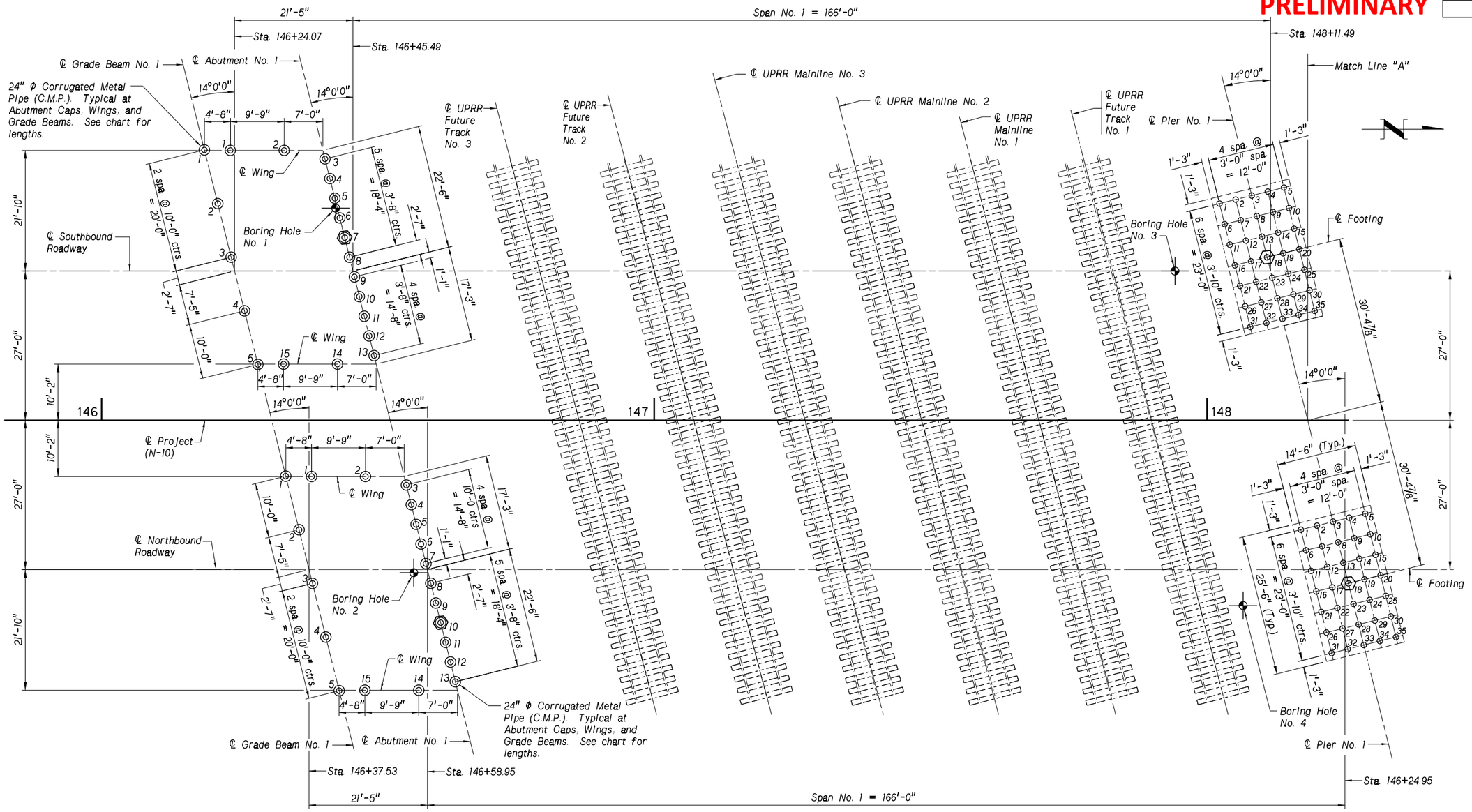

PILE LAYOUT

BORING HOLE INFORMATION			
Hole	Station	Offset	Date of Boring
1	146+42.35	38'-4 5/8" Lt.	June 5, 2012
2	146+56.48	27'-6 13/16" Rt.	May 22, 2012
3	147+94.19	26'-11 1/4" Lt.	June 6, 2012
4	148+08.29	33'-6 1/4" Rt.	June 6, 2012

⬡ Designates Test Pile (See sheet 9 of 48 for test pile information)

See sheet 9 of 48 for pile data information.

CORRUGATED METAL PIPE (C.M.P.) LENGTHS FOR ABUTMENT NO. 1					
Southbound			Northbound		
Location	Pile Number	C.M.P. Length	Location	Pile Number	C.M.P. Length
Abut. No. 1	1 - 15	29'-0"	Abut. No. 1	1 - 15	29'-0"
Grade Beam No. 1	1 - 5	35'-0"	Grade Beam No. 1	1 - 5	35'-0"

PROFESSIONAL CIVIL ENGINEER JORDAN L. LARSEN E-12450 STATE OF NEBRASKA

PROJECT NUMBER	SHEET NO.
10-2(116)	

C.N. 42103B

STRUCTURE NUMBER S010 05443 L&R

PROFESSIONAL CIVIL ENGINEER MARK J. TRAYNOWICZ E-8119 STATE OF NEBRASKA

BRIDGE ENGINEER

332'-0" 2-SPAN PRESTRESSED (NU1800) GIRDER BRIDGE

PILE LAYOUT

COUNTY BUFFALO
HWY. NO. N-10
REF. POST. 54.43
STA. 148+18.22

LOCATION KEARNEY EAST BYPASS (11th ST. TO 56th ST.)
SKEW 14° LHB
ROADWAY 39'-0"
DESIGN LIVE LOAD HL-93

DATE APRIL 2013

DESIGNED BY SS
DETAILED BY MR
CHECKED BY MJA

STATE OF NEBRASKA - DEPARTMENT OF ROADS - BRIDGE DIVISION

NDOR Nebraska Department of Roads

PROFESSIONAL STRUCTURAL ENGINEER M.J. STEVE SABRA E-8112 STATE OF NEBRASKA

SPECIAL PLAN NO. 1

DGNSPEC$$$$$$$$$$$$$$ DATE$$$$$$$$$$$$$$$ USERNAME$$$$$ COMPUTER$$$$$

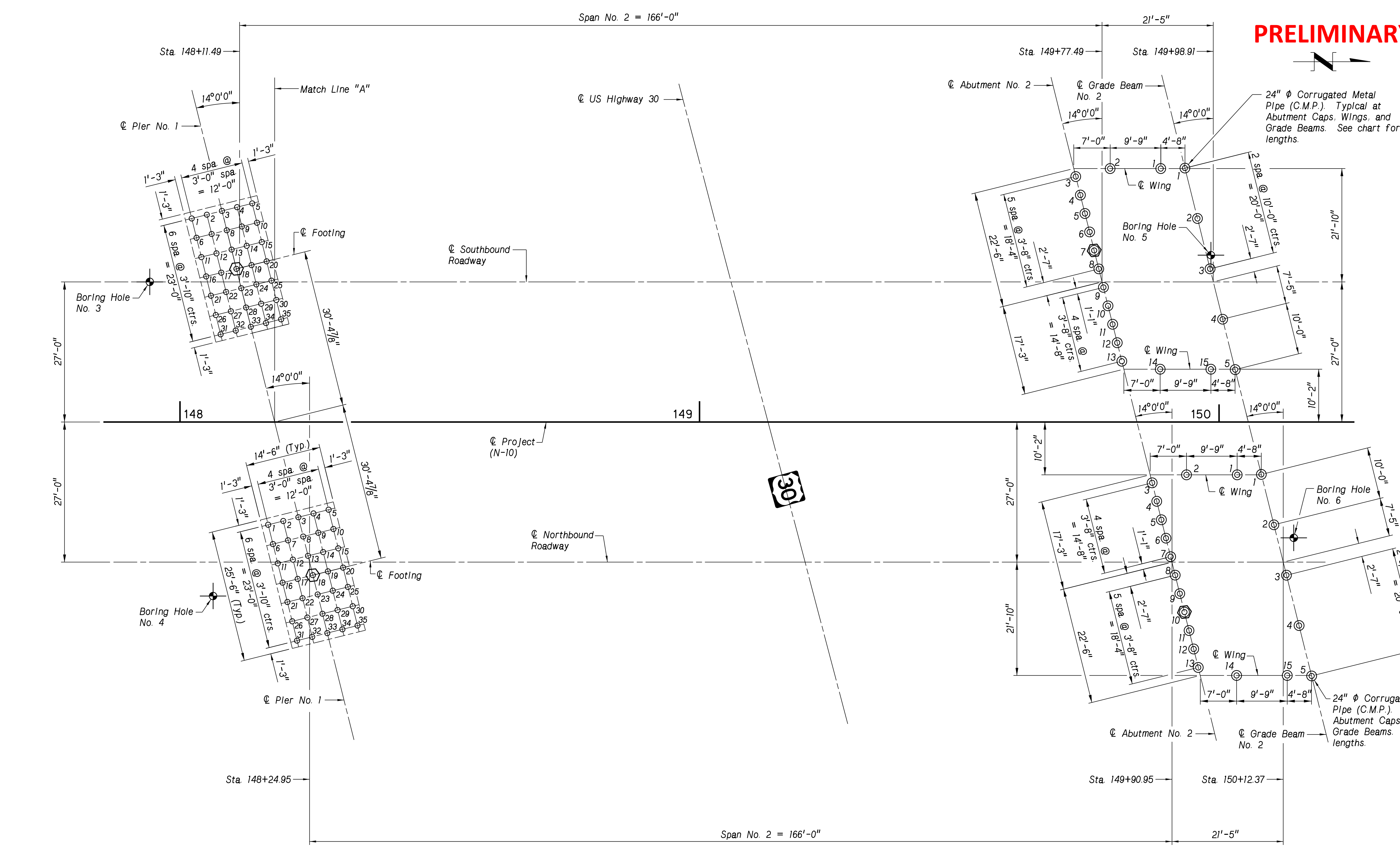

PILE LAYOUT

BORING HOLE INFORMATION			
Hole	Station	Offset	Date of Boring
3	147+94.19	26'-11¼" Lt.	June 6, 2012
4	148+08.29	33'-6¼" Rt.	June 6, 2012
5	149+98.45	32'-1⅝" Lt.	June 13, 2012
6	150+14.39	22'-3¾" Rt.	June 12, 2012

⬡ Designates Test Pile (See sheet 9 of 48 for test pile information)

See sheet 9 of 48 for pile data information.

CORRUGATED METAL PIPE (C.M.P.) LENGTHS FOR ABUTMENT NO. 2					
Southbound			Northbound		
Location	Pile Number	C.M.P. Length	Location	Pile Number	C.M.P. Length
Abut. No. 2	1 - 15	29'-0"	Abut. No. 2	1 - 15	29'-0"
Grade Beam No. 2	1 - 5	35'-0"	Grade Beam No. 2	1 - 5	35'-0"

PROFESSIONAL CIVIL ENGINEER JORDAN L. LARSEN E-12450 STATE OF NEBRASKA

PROJECT NUMBER 10-2(116)
SHEET NO.
C.N. 42103B
STRUCTURE NUMBER S010 05443 L&R

PROFESSIONAL CIVIL ENGINEER MARK J. TRAYNOWICZ E-8119 STATE OF NEBRASKA

BRIDGE ENGINEER

332'-0" 2-SPAN PRESTRESSED (NU1800) GIRDER BRIDGE
PILE LAYOUT

LOCATION KEARNEY EAST BYPASS (11th ST. TO 56th ST.)
SKEW 14° LHB
ROADWAY 39'-0"
DESIGN LIVE LOAD HL-93
DETAILED BY MR
CHECKED BY MJA
DATE APRIL 2013
COUNTY BUFFALO
HWY. NO. N-10
REF. POST.
STA. 148+18.22
DESIGNED BY SS

STATE OF NEBRASKA - DEPARTMENT OF ROADS - BRIDGE DIVISION

NDOR Nebraska Department of Roads

PROFESSIONAL STRUCTURAL ENGINEER M.J. STEVE SABRA E-8112 STATE OF NEBRASKA

SPECIAL PLAN NO. 1

PRELIMINARY

PROJECT NUMBER	SHEET NO.
10-2(116)	

C.N. 42103B

STRUCTURE NUMBER S010 05443 L&R

PROFESSIONAL CIVIL ENGINEER MARK J. TRAYNOWICZ E-8119 STATE OF NEBRASKA

BRIDGE ENGINEER

PILE DATA (SOUTHBOUND BRIDGE)

LOCATION	PILE NUMBER	CUT-OFF ELEVATION	MINIMUM PENETRATION BELOW CUT-OFF (feet)	PILE ORDER LENGTH (feet)	TENTATIVE PILE ORDER LENGTH (feet)	DESIGN PILE BEARING (kips/pile)	PILE TYPE
Grade Beam No. 1	1	2160.22			80	135	Pipe Pile
	2	2160.43			80	135	Pipe Pile
	3	2160.64			80	135	Pipe Pile
	4	2160.85			80	135	Pipe Pile
	5	2161.04			80	135	Pipe Pile
Abutment No. 1	1 , 2	2158.35			80	75	Pipe Pile
	3 , 4	2156.00			130	250	Pipe Pile
	5 , 6	2156.24			130	250	Pipe Pile
	8 , 9	2156.41			130	250	Pipe Pile
	10 , 11	2156.59			130	250	Pipe Pile
	12 , 13	2156.73			130	250	Pipe Pile
	14 , 15	2158.35			80	75	Pipe Pile
Pier No. 1	1-17,19-35	2120.06			90	225	Pipe Pile
Abutment No. 2	1 , 2	2158.08			80	75	Pipe Pile
	3 , 4	2155.79			130	250	Pipe Pile
	5 , 6	2155.99			130	250	Pipe Pile
	8 , 9	2156.15			130	250	Pipe Pile
	10 , 11	2156.31			130	250	Pipe Pile
	12 , 13	2156.43			130	250	Pipe Pile
	14 , 15	2158.08			80	75	Pipe Pile
Grade Beam No. 2	1	2160.00			80	135	Pipe Pile
	2	2160.18			80	135	Pipe Pile
	3	2160.37			80	135	Pipe Pile
	4	2160.56			80	135	Pipe Pile
	5	2160.73			80	135	Pipe Pile

PILE DATA (NORTHBOUND BRIDGE)

LOCATION	PILE NUMBER	CUT-OFF ELEVATION	MINIMUM PENETRATION BELOW CUT-OFF (feet)	PILE ORDER LENGTH (feet)	TENTATIVE PILE ORDER LENGTH (feet)	DESIGN PILE BEARING (kips/pile)	PILE TYPE
Grade Beam No. 1	1	2161.08			80	135	Pipe Pile
	2	2160.90			80	135	Pipe Pile
	3	2160.71			80	135	Pipe Pile
	4	2160.52			80	135	Pipe Pile
	5	2160.33			80	135	Pipe Pile
Abutment No. 1	1 , 2	2158.59			80	75	Pipe Pile
	3 , 4	2156.70			130	250	Pipe Pile
	5 , 6	2156.53			130	250	Pipe Pile
	7 , 8 , 9	2156.37			130	250	Pipe Pile
	11	2156.20			130	250	Pipe Pile
	12 , 13	2156.04			130	250	Pipe Pile
	14 , 15	2158.59			80	75	Pipe Pile
Pier No. 1	1-17,19-35	2120.06			90	225	Pipe Pile
Abutment No. 2	1 , 2	2158.02			80	75	Pipe Pile
	3 , 4	2156.35			130	250	Pipe Pile
	5 , 6	2156.17			130	250	Pipe Pile
	7 , 8 , 9	2155.99			130	250	Pipe Pile
	11	2155.81			130	250	Pipe Pile
	12 , 13	2155.63			130	250	Pipe Pile
	14 , 15	2158.02			80	75	Pipe Pile
Grade Beam No. 2	1	2160.67			80	135	Pipe Pile
	2	2160.47			80	135	Pipe Pile
	3	2160.26			80	135	Pipe Pile
	4	2160.05			80	135	Pipe Pile
	5	2159.83			80	135	Pipe Pile

TEST PILE DATA (SOUTHBOUND BRIDGE)

LOCATION	PILE NUMBER	CUT-OFF ELEVATION	PILE ORDER LENGTH (feet)	DESIGN PILE BEARING (kips/pile)
Abut. No. 1	7	2156.41	140	250
Pier No. 1	18	2120.06	100	225
Abut. No. 2	7	2156.15	140	250

TEST PILE DATA (NORTHBOUND BRIDGE)

LOCATION	PILE NUMBER	CUT-OFF ELEVATION	PILE ORDER LENGTH (feet)	DESIGN PILE BEARING (kips/pile)
Abut. No. 1	10	2156.20	140	250
Pier No. 1	18	2120.06	100	225
Abut. No. 2	10	2155.81	140	250

See sheets 7 and 8 of 48 for pile layout details.

MSE WALL PILING NOTES

Abutment and grade beam piling may be driven before or after the construction of the MSE walls. If the piling are to be driven before the construction of the MSE wall, the Contractor shall place Corrugated Metal Pipe (CMP) sleeves around each piling prior to constructing the wall.

If the piling are to be driven after the construction of the MSE wall, the Contractor shall place CMP sleeves at the exact location of each pile so that after the completion of the MSE wall the Contractor can drive the piles through the sleeves.

The CMP sleeves shall be maintained in a plumb position during construction of the MSE wall. Furnishing and placing of the CMP sleeves shall be included as part of the work for the MSE wall.

After all piling for the abutment and grade beam are driven and the MSE wall is complete, the Contractor shall fill the space between the piling and the CMP sleeves with dry, clean sand. Backfilling with sand shall be considered subsidiary to the Pay Item "PIPE PILING".

TEST PILE NOTES

Pile order lengths (with the exception of those shown for the test piles) are tentative. The final order lengths shall be based on the results obtained from the test pile driving. The driving of the test pile will be monitored with a Pile Driving Analyzer. Final order lengths will be provided by the engineer to the contractor within three (3) working days after the test pile driving is complete.

Test piles will be driven, as shown in the TEST PILE DATA table.

At the engineer's option, additional piling may be monitored with the Pile Driving Analyzer.

The use of the Pile Driving Analyzer will require the contractor to setup the hammer for driving. The contractor shall bolt two accelerometers and two strain transducers to the pile before driving is started. The holes or anchors for the accelerometers and strain transducers will have been predrilled by department personnel while the pile is still on the ground. The contractor may be required to stop the hammer for wave speed determination after the first few blows.

The contractor shall drive the pile until the tranducers are near the surface of the ground, or as directed by the engineer, at which time the contractor shall stop the hammer for the removal of the accelerometers and strain transducers. The contractor shall continue driving the pile to cut-off or as directed by the engineer.

The time delay in driving each pile being monitored by the Pile Driving Analyzer will normally range from 30 to 60 minutes. The contractor shall provide access to the pile driving area for the engineer's equipment vehicle (light truck). The work performed by the contractor, in conjunction with the use of the Pile Driving Analyzer, as described herein, shall not be paid for directly, but shall be considered subsidiary to items for which direct payment is made.

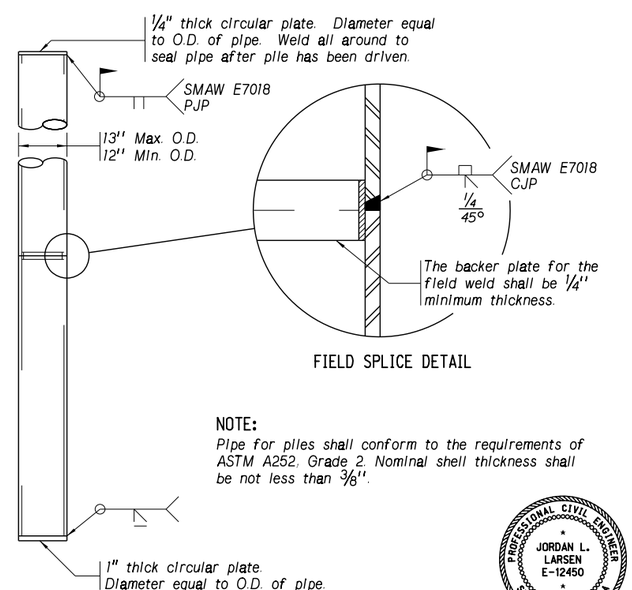

FIELD SPLICE DETAIL

NOTE:
Pipe for piles shall conform to the requirements of ASTM A252, Grade 2. Nominal shell thickness shall be not less than 3/8".

PIPE PILE DETAIL
Not to Scale

PROFESSIONAL CIVIL ENGINEER JORDAN L. LARSEN E-12450 STATE OF NEBRASKA

332'-0" 2-SPAN PRESTRESSED (NU1800) GIRDER BRIDGE
PILE DATA

COUNTY BUFFALO
HWY. NO. N-10
REF. POST. 54.43
STA. 148+18.22

LOCATION KEARNEY EASY BYPASS
SKEW 14° LHB (11th ST. TO 56th ST.)
ROADWAY 39'-0"
DESIGN LIVE LOAD HL-93

DATE APRIL 2013
DETAILED BY MR
CHECKED BY MJA
DESIGNED BY SS

STATE OF NEBRASKA - DEPARTMENT OF ROADS - BRIDGE DIVISION

NDOR Nebraska Department of Road

PROFESSIONAL STRUCTURAL ENGINEER M.J. STEVE SABRA E-8112 STATE OF NEBRASKA

SPECIAL PLAN NO. 1

COMPUTER$$$$ USERNAME$$$$ DATE$$$$$$$$$$$$$$ DGNSPEC$$$$$$$$$$$

PRELIMINARY

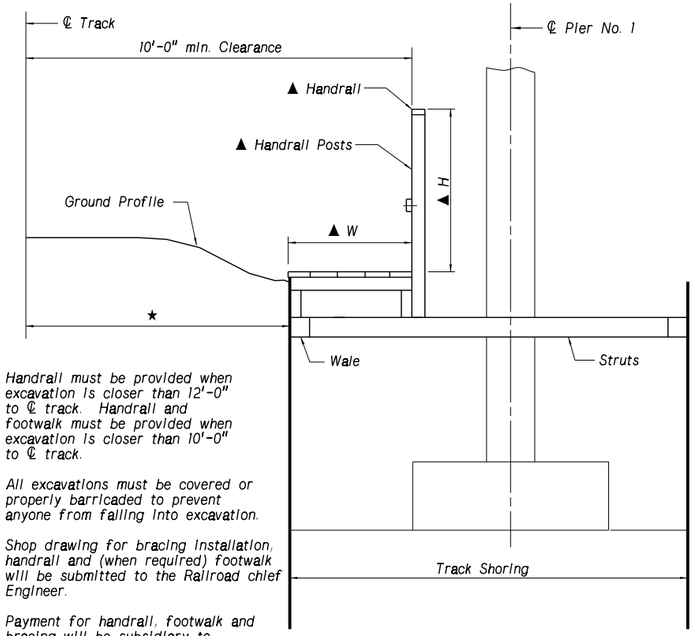

★ Handrail must be provided when excavation is closer than 12'-0" to ℄ track. Handrail and footwalk must be provided when excavation is closer than 10'-0" to ℄ track.

All excavations must be covered or properly barricaded to prevent anyone from falling into excavation.

Shop drawing for bracing installation, handrail and (when required) footwalk will be submitted to the Railroad chief Engineer.

Payment for handrail, footwalk and bracing will be subsidiary to payment for Pier Excavation.

▲ Handrail and Footwalk dimensions shall conform to OSHA requirements.

TRACK PROTECTION SHORING REQUIREMENTS

Shoring plans must be submitted for railroad approval prior to construction. A top of rail monitoring plan must be included with the shoring design submittal. A ¼" maximum deflection is acceptable in both the horizontal direction and/or vertical direction.

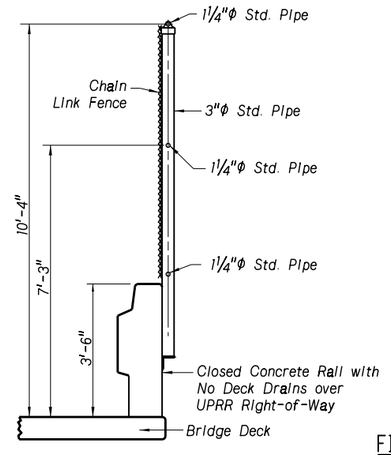

TYPICAL FENCE ON CONCRETE RAIL

FIELD SURVEYED TOP OF RAIL ELEVATIONS

(Stations Increase with Milepost Increase)

MAIN LINE 1 (ML1)		MAIN LINE 2 (ML2)		MAIN LINE 3 (ML3)	
Alignment:	North Rail	Alignment:	North Rail	Alignment:	North Rail
Station	Elevation	Station	Elevation	Station	Elevation
1088'	2134.42	----	----	1077'	2133.65
986'	2134.24	1082'	2133.78	975'	2133.51
879'	2134.09	981'	2133.63	868'	2133.36
770'	2133.95	874'	2133.47	760'	2133.24
659'	2133.83	765'	2133.33	649'	2133.13
546'	2133.68	651'	2133.17	537'	2133.00
441'	2133.45	542'	2133.04	432'	2132.93
336'	2133.35	435'	2132.84	328'	2132.77
223'	2133.31	332'	2132.65	244'	2132.79
170'	2133.24	241'	2132.56	198'	2132.73
127'	2133.06	189'	2132.46	150'	2132.63
80'	2133.05	140'	2132.37	105'	2132.56
40'	2132.98	94'	2132.28	54'	2132.47
26'	2132.88	43'	2132.26	15'	2132.25
① 0+00	2132.89	② 0+00	2132.21	③ 0+00	2132.40
-7'	2132.90	-9'	2132.22	-51'	2132.34
-53'	2132.85	-61'	2132.18	-105'	2132.23
-102'	2132.78	-113'	2132.19	-159'	2132.16
-154'	2132.67	-156'	2132.07	-211'	2131.99
-210'	2132.58	-208'	2132.06	-309'	2131.91
-300'	2132.41	-304'	2131.93	-410'	2131.82
-400'	2132.23	-404'	2131.85	-522'	2131.77
-512'	2132.08	-517'	2131.75	-629'	2131.81
-619'	2131.91	-624'	2131.76	-732'	2131.80
-722'	2131.83	-727'	2131.66	-829'	2131.58
-820'	2131.74	-825'	2131.47	-934'	2131.36
-923'	2131.48	-929'	2131.21	-1038'	2131.17
-1027'	2131.42	-1032'	2131.05	----	----

① ℄ Existing Track Sta. 0+00 = ℄ Construction Sta. 147+69.09

② ℄ Existing Track Sta. 0+00 = ℄ Construction Sta. 147+47.94

③ ℄ Existing Track Sta. 0+00 = ℄ Construction Sta. 147+27.79

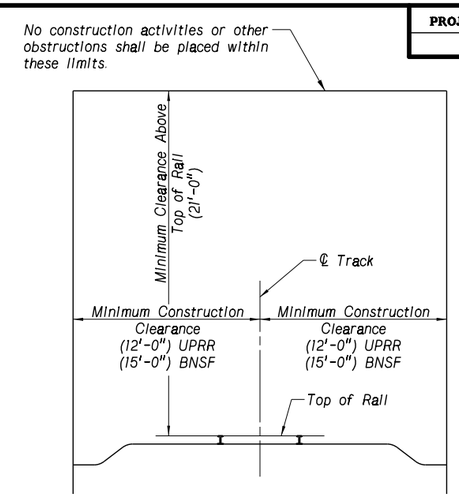

MINIMUM CONSTRUCTION CLEARANCES

RAILROAD GENERAL NOTES:

Railroad requirements do not allow work within 50 feet of track centerline when a train passes the work site and all personnel must clear the area within 25 feet of the track centerline and secure all equipment.

Railroad review and approval of shoring, erection, demolition, and false-work is required. Allow a minimum of four weeks for the review and approval of each submittal.
(Section 3.5 BNSF/UPRR Grade Separation Guidelines)

The proposed grade separation project shall not increase the quantity and/or characteristics of the flow in the Railroad's ditches and/or drainage structures.
(Section 5.7 BNSF/UPRR Grade Separation Guidelines)

The elevation of the existing top-of-rail profile shall be verified before beginning construction. All discrepancies shall be brought to the attention of the Railroad prior to construction.
(Section 5.2.1 BNSF/UPRR Grade Separation Guidelines)

The contractor must submit a proposed method of erosion and sediment control and have the method approved by the Railroad.
(Section 4.5.1 BNSF/UPRR Grade Separation Guidelines)

All shoring systems that impact the Railroad's operations and/or supports the Railroad's embankment shall be designed and constructed per current Railroad Guidelines for Temporary Shoring.
(Section 4.4.2 BNSF/UPRR Grade Separation Guidelines)

All demolitions within the Railroad's right-of-way and/or demolition that may impact the Railroad's tracks or operations shall be in compliance with the Railroad's Demolition Guidelines.
(Section 4.4.3 BNSF/UPRR Grade Separation Guidelines)

Erection over the Railroad's right-of-way shall be designed to cause no interruption to the Railroad's operation, enabling the track(s) to remain open to traffic per the Railroad's requirements.
(Section 4.4.4 BNSF/UPRR Grade Separation Guidelines)

False-work clearances shall comply with minimum construction clearances.
(Section 4.4.1; 4.4.5; 5.3 BNSF/UPRR Grade Separation Guidelines)

All permanent clearances shall be verified before project closing.
(Plan No. 711100 Sheet 3 BNSF/UPRR Grade Separation Guidelines)

For Railroad coordination please refer to the Railroad Minimum Requirements in the special provisions.

TRACK PROTECTION SHORING:

All dimensions are measured perpendicular to ℄ Track.

The contractor shall provide and install track protection shoring before commencing excavation. Prior to commencing any work, the contractor shall submit for approval by the railroad, detailed plans indicating the nature and extent of the track protection shoring proposed.

Shoring shall be designed for Cooper E80 live load surcharge and the Railroad may impose more stringent requirements as conditions warrant.

For excavations which encroach into railroad live load surcharge zone, shoring plans must be accompanied by a copy of the design calculations, and both must be stamped by a Professional Engineer registered in the state of Nebraska.

Design of shoring shall comply with the railroad's guidelines and A.R.E.M.A. Specifications for design and construction of shoring adjacent to active railroad tracks.

Direct payment will not be made for this work, but shall be considered subsidiary to the Pier Excavation.

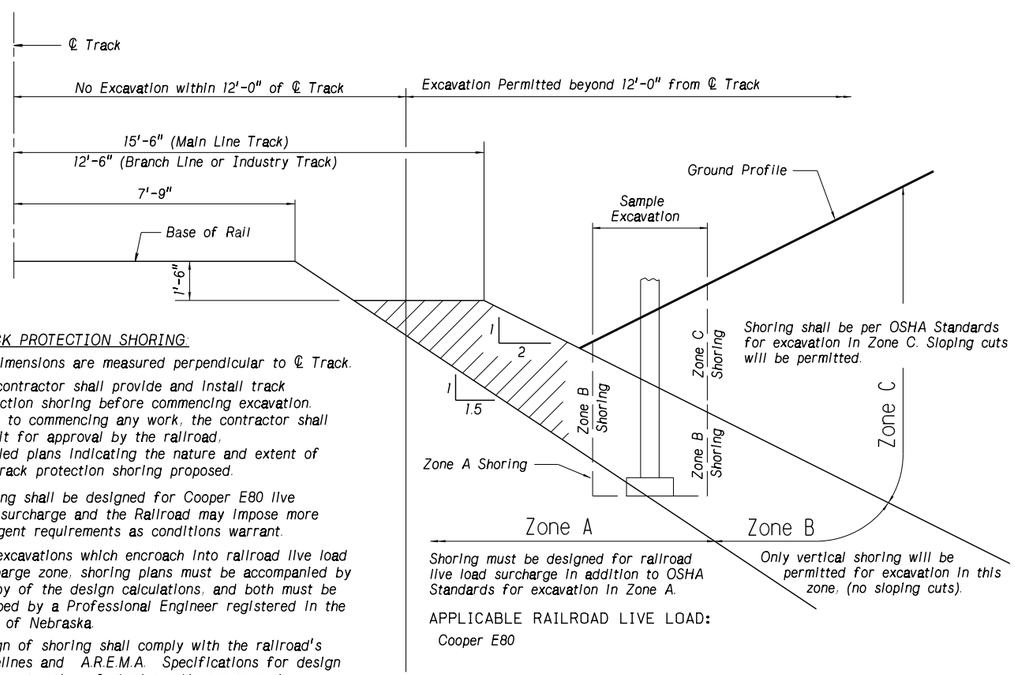

APPLICABLE RAILROAD LIVE LOAD:

Cooper E80

TRACK PROTECTION SHORING REQUIREMENTS

PROJECT NUMBER	SHEET NO.
10-2(116)	

C.N. 42103B

STRUCTURE NUMBER S010 05443 L&R

PROFESSIONAL CIVIL ENGINEER MARK J. TRAYNOWICZ E-8119 STATE OF NEBRASKA

BRIDGE ENGINEER

332'-0" 2-SPAN PRESTRESSED (NU1800) GIRDER BRIDGE
TRACK PROTECTION SHORING

LOCATION KEARNEY EAST BYPASS
SKEW 14° LHB (11th ST. TO 56th ST.)
ROADWAY 39'-0"
DESIGN LIVE LOAD HL-93

DATE APRIL 2013
CHECKED BY MJA
DETAILED BY MR
DESIGNED BY SS

COUNTY BUFFALO
HWY. NO. N-10
REF. POST.
STA. 148+18.22

STATE OF NEBRASKA - DEPARTMENT OF ROADS - BRIDGE DIVISION

NDOR Nebraska Department of Road.

PROFESSIONAL STRUCTURAL ENGINEER M.J. STEVE SABRA E-8112 STATE OF NEBRASKA

SPECIAL PLAN NO. 1

DGNSPEC$$$$$$$$$$$$ DATE$$$$$$$$$$$$$$$ USERNAME$$$$ COMPUTER$$$$

PRELIMINARY

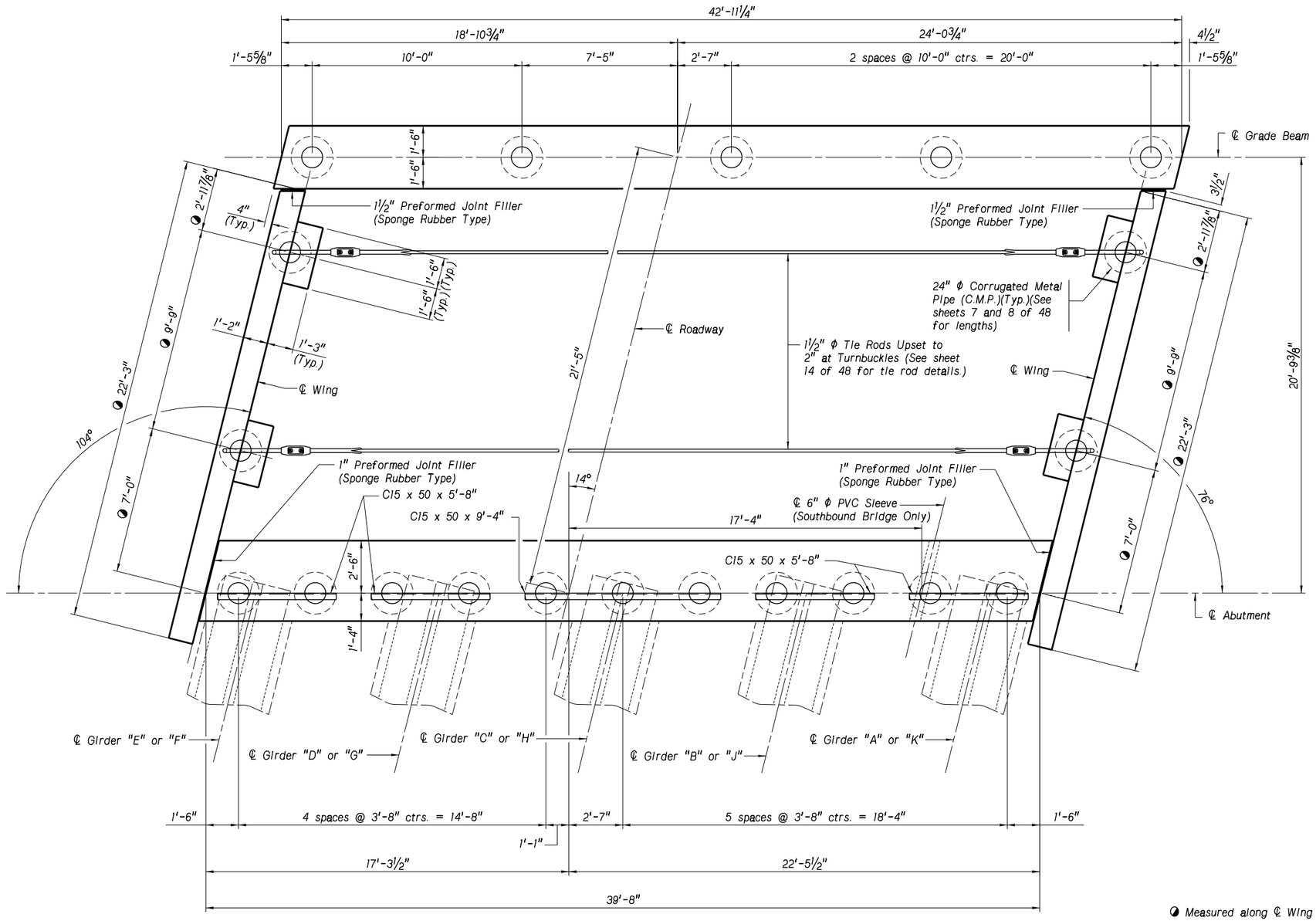

◑ Measured along ℄ Wing

See sheet 17 of 48 for additional Northbound Bridge abutment details.

See sheet 12 of 48 for abutment reinforcement details.

PLAN VIEW OF ABUTMENT SHOWING DIMENSIONS

Southbound Bridge Abutment No. 1 Shown, Abutment No. 2 Similar and Opposite
Northbound Bridge Abutment No. 1 and 2 Same

ABUTMENT GIRDER SEAT ELEVATIONS

* SOUTHBOUND BRIDGE			** NORTHBOUND BRIDGE		
	Abutment No. 1	Abutment No. 2		Abutment No. 1	Abutment No. 2
Girder "A"	2156.26	2156.03	Girder "F"	2156.85	2156.51
Girder "B"	2156.47	2156.23	Girder "G"	2156.69	2156.33
Girder "C"	2156.65	2156.39	Girder "H"	2156.53	2156.15
Girder "D"	2156.83	2156.55	Girder "J"	2156.36	2155.97
Girder "E"	2156.96	2156.67	Girder "K"	2156.20	2155.79

* Cast-In-Place Deck

** NU Precast Deck Panels

PROJECT NUMBER	SHEET NO.
10-2(116)	

C.N. 42103B

STRUCTURE NUMBER S010 05443 L&R

PROFESSIONAL CIVIL ENGINEER MARK J. TRAYNOWICZ E-8119 STATE OF NEBRASKA

BRIDGE ENGINEER

332'-0" 2-SPAN PRESTRESSED (NU-1800) GIRDER BRIDGE
PLAN VIEW OF ABUTMENT SHOWING DIMENSIONS

COUNTY BUFFALO
HWY. NO. N-10
REF. POST. 54.43
STA. 148+18.22

LOCATION KEARNEY EAST BYPASS (11th ST. TO 56th ST.)
SKEW 14° LHB
ROADWAY 39'-0"
DESIGN LIVE LOAD HL-93

DATE APRIL 2013
DETAILED BY MR
CHECKED BY MJA
DESIGNED BY SS

STATE OF NEBRASKA - DEPARTMENT OF ROADS - BRIDGE DIVISION

NDOR Nebraska Department of Roads

PROFESSIONAL STRUCTURAL ENGINEER M.J. STEVE SABRA E-8112 STATE OF NEBRASKA

SPECIAL PLAN NO. 1

File: c010 05443l&r_b.dgn Date: 02-JUL-2013 11:01 User: dor2062 Computer: DRBRIDGE29

PRELIMINARY

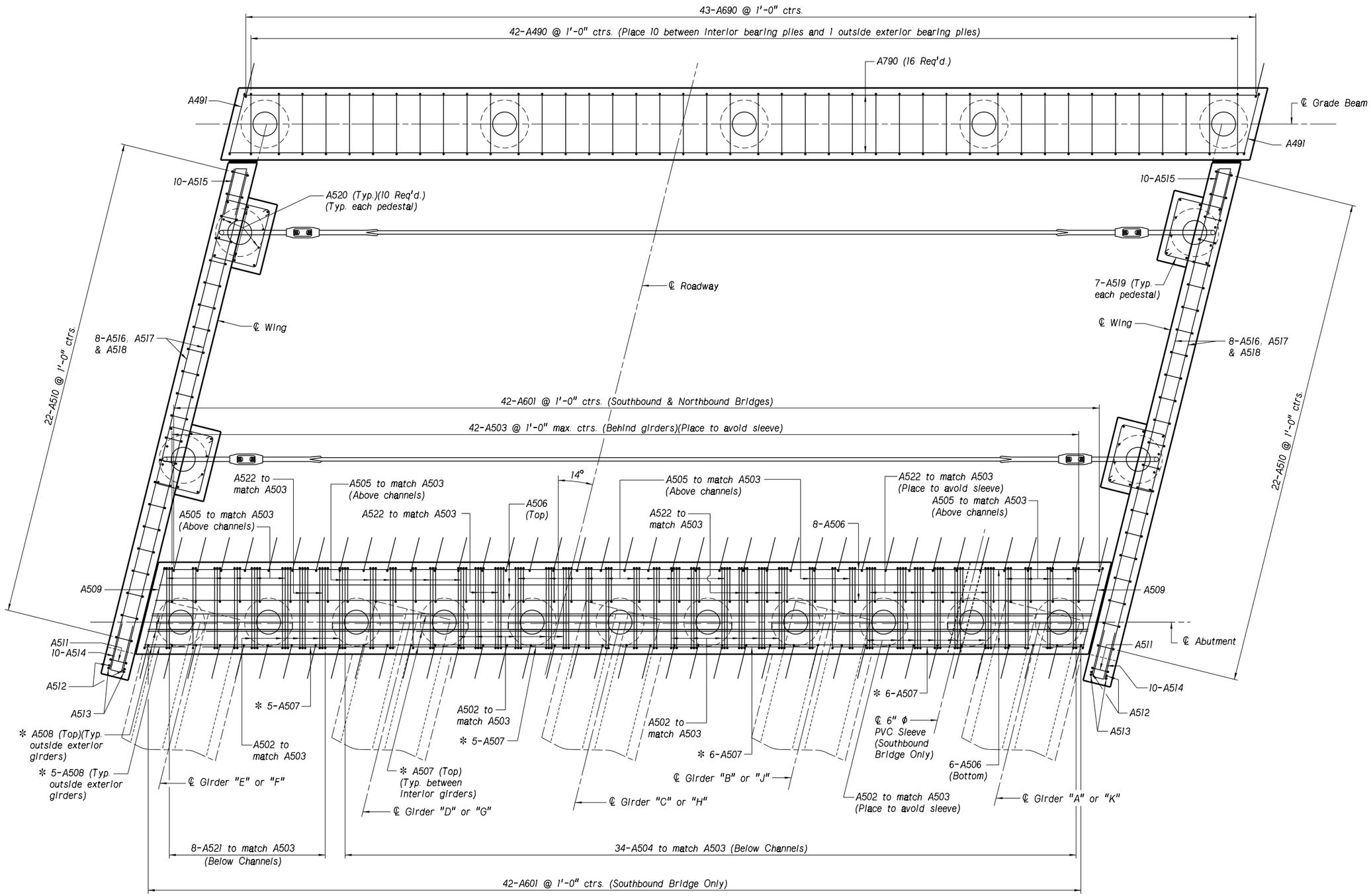

PLAN VIEW OF ABUTMENT SHOWING REINFORCEMENT STEEL LAYOUT

Southbound Bridge Abutment No. 1 Shown, Abutment No. 2 Similar and Opposite
Northbound Bridge Abutment No. 1 and 2 Same

✻ Field cut A507 and A508 bars as necessary to maintain 1" clearance from the girders. Apply epoxy coating to cut bar ends.

See sheet 11 of 48 for abutment dimensions.

See sheets 13, 14, 15 and 16 of 48 for additional abutment reinforcement details.

See sheet 18 of 48 for Abutment Bill of Bars.

PROJECT NUMBER	SHEET NO.
10-2(116)	

C.N. 42103B

STRUCTURE NUMBER
S010 05443 L&R

PROFESSIONAL CIVIL ENGINEER
MARK J. TRAYNOWICZ
E-8119
STATE OF NEBRASKA

BRIDGE ENGINEER

332'-0" 2-SPAN PRESTRESSED
(NU-1800) GIRDER BRIDGE
PLAN VIEW OF ABUTMENT
SHOWING REINFORCEMENT

COUNTY BUFFALO
HWY. NO. N-10
REF. POST. 54.43
STA. 148+18.22

LOCATION KEARNEY EAST BYPASS
(11th ST. TO 56th ST.)
SKEW 14° LHB
ROADWAY 39'-0"
DESIGN LIVE LOAD HL-93

DATE APRIL 2013

DESIGNED BY SS
DETAILED BY MR
CHECKED BY MJA
BY MJA

STATE OF NEBRASKA - DEPARTMENT OF ROADS - BRIDGE DIVISION

NDOR
Nebraska Department of Roads

PROFESSIONAL STRUCTURAL ENGINEER
M.J. STEVE SABRA
E-8112
STATE OF NEBRASKA

SPECIAL PLAN NO. 1

12/48

File: c010 05443l&r_b.dgn Date: 02-JUL-2013 11:02 User: dor2062 Computer: DRBRIDGE29

PRELIMINARY

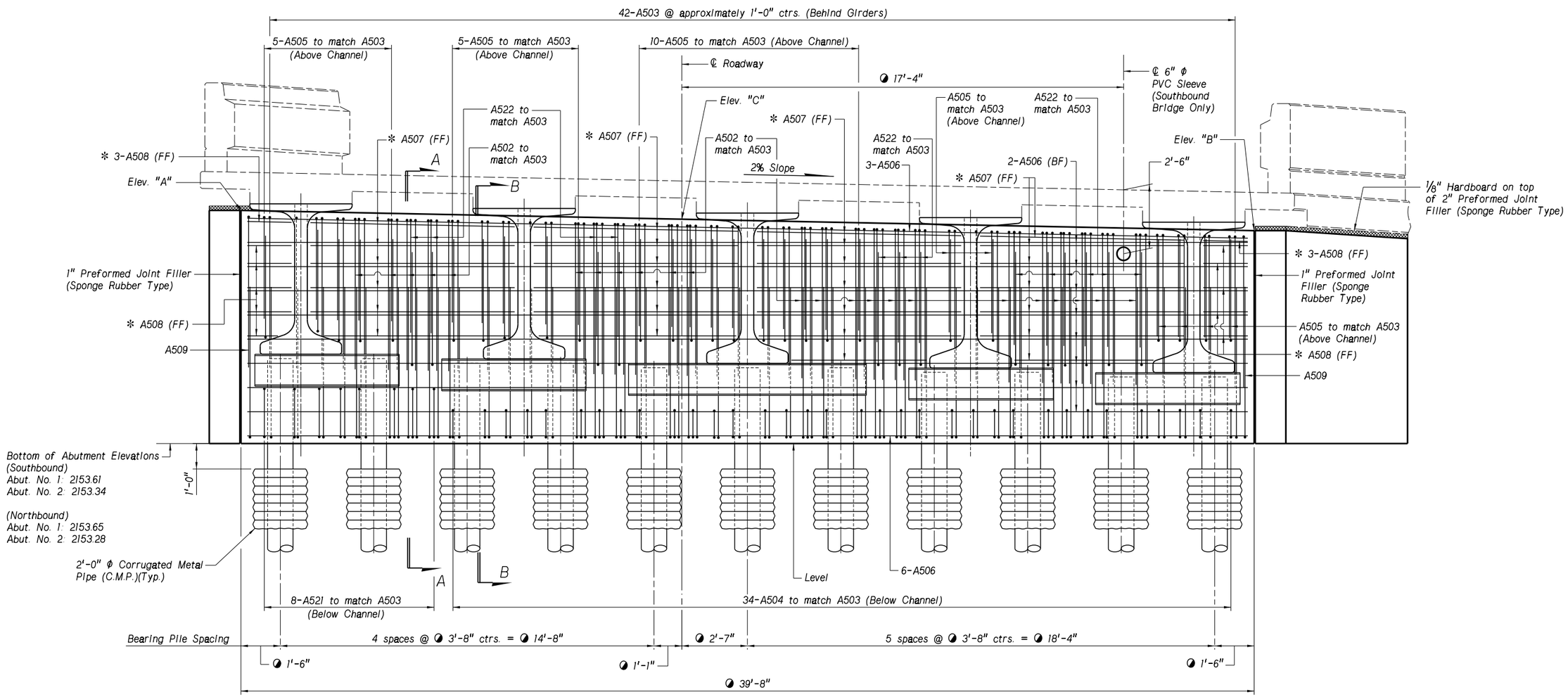

ELEVATION VIEW OF ABUTMENT SHOWING REINFORCEMENT STEEL LAYOUT

Southbound Bridge Abutment No. 1 Shown; Abutment No. 2 Similar and Opposite
Northbound Bridge Abutment No. 1 and 2 Same

TOP ELEVATIONS FOR ABUTMENT CAP			
Southbound	Elev. "A"	Elev. "B"	Elev. "C"
Abut. No. 1	2162.46	2161.66	2162.11
Abut. No. 2	2162.16	2161.43	2161.84
Northbound	Elev. "A"	Elev. "B"	Elev. "C"
Abut. No. 1	2162.47	2161.73	2162.15
Abut. No. 2	2162.13	2161.31	2161.78

✻ Field cut A507 and A508 bars as necessary to maintain 1" clearance from the girders. Apply epoxy coating to cut bar ends.

◑ Measured along ℄ Abutment.

See sheet 14 of 48 for Sections A-A and B-B.

See sheet 18 of 48 for Abutment Bill of Bars.

PROJECT NUMBER	SHEET NO.
10-2(116)	

C.N. 42103B

STRUCTURE NUMBER S010 05443 L&R

PROFESSIONAL CIVIL ENGINEER MARK J. TRAYNOWICZ E-8119 STATE OF NEBRASKA

BRIDGE ENGINEER

332'-0" 2-SPAN PRESTRESSED (NU-1800) GIRDER BRIDGE
ELEVATION VIEW OF ABUTMENT

COUNTY BUFFALO
HWY. NO. N-10
REF. POST. 54.43
STA. 148+18.22

LOCATION KEARNEY EAST BYPASS (11th ST. TO 56th ST.)
SKEW 14° LHB
ROADWAY 39'-0"
DESIGN LIVE LOAD HL-93

DATE APRIL 2013
CHECKED BY MJA
DETAILED BY MR
DESIGNED BY SS

STATE OF NEBRASKA - DEPARTMENT OF ROADS - BRIDGE DIVISION

NDOR Nebraska Department of Roads

PROFESSIONAL STRUCTURAL ENGINEER M.J. STEVE SABRA E-8112 STATE OF NEBRASKA

SPECIAL PLAN NO. 1

File: s010 05443l&r_b.dgn Date: 02-JUL-2013 11:03 User: dor2062 Computer: DRBRIDGE29

PRELIMINARY

PROJECT NUMBER	SHEET NO.
10-2(116)	

C.N. 42103B

STRUCTURE NUMBER S010 05443 L&R

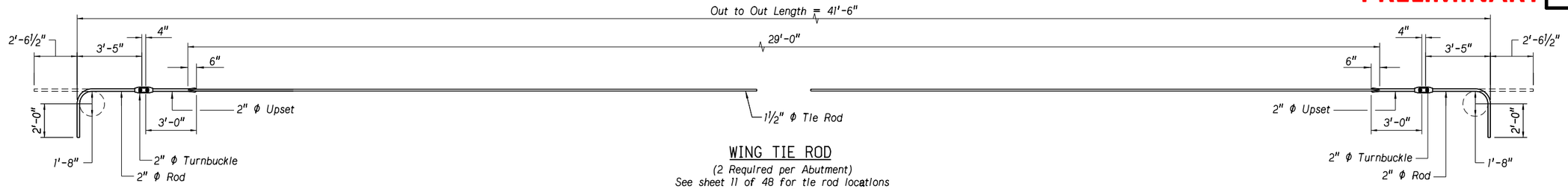

WING TIE ROD

(2 Required per Abutment)
See sheet 11 of 48 for tie rod locations
Not to Scale

See Plan View of Abutment on sheet 11 of 48 for placement of tie rods.

✻ Field cut A507 and A508 bars as necessary to maintain 1" clearance from the girders. Apply epoxy coating to cut bar ends.

◑ Measured perpendicular to ℄ Abutment.

▲ Measured along ℄ Roadway

See sheet 18 of 48 for Abutment Bill of Bars.

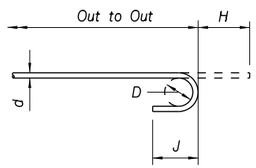

TIE ROD HOOK DETAIL

Not to Scale

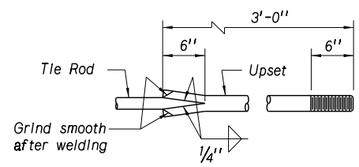

TIE ROD UPSET DETAIL

Not to Scale

Note: As an alternate, the entire tie rod may be of the size shown for the upset.

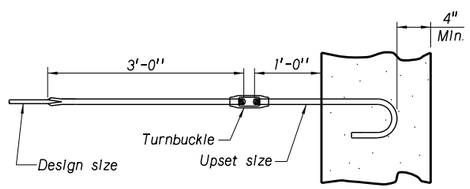

DETAIL FOR TURNBUCKLES

Not to Scale

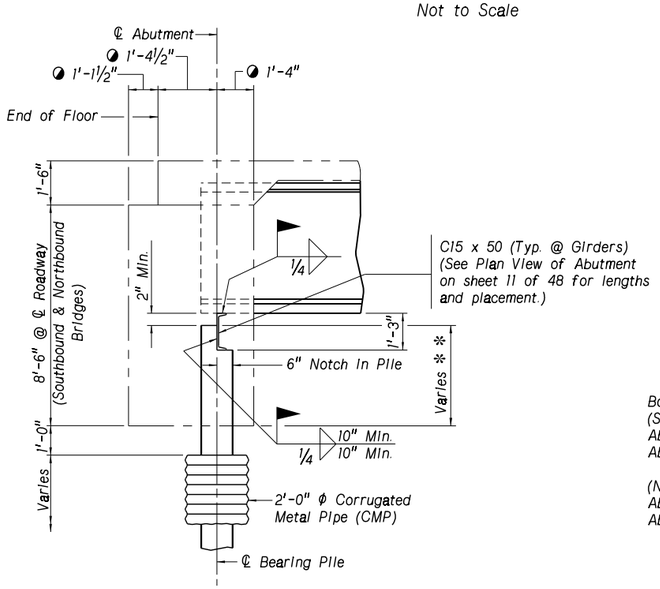

GIRDER SUPPORT DETAIL

(Typ. all Girders)
Not to Scale

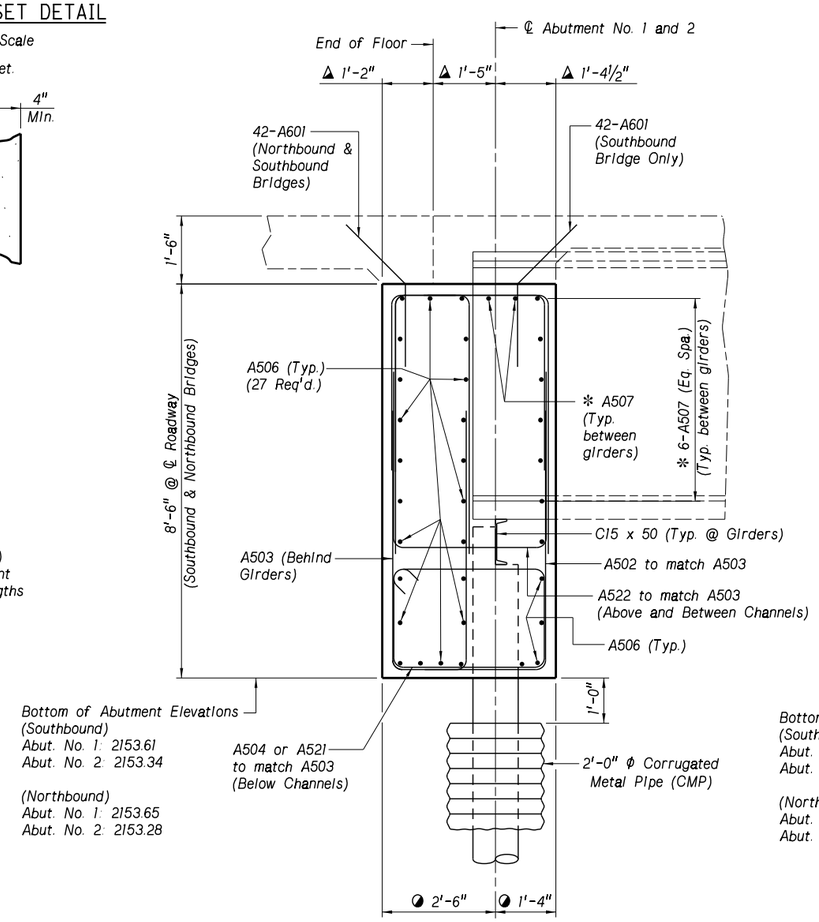

SECTION A-A

Southbound Bridge Abutment Shown,
Between Girders
See sheet 13 of 48 for location of Section A-A
See Section C-C on sheet 17 of 48 for Northbound Bridge Section of Abutment
Not to Scale

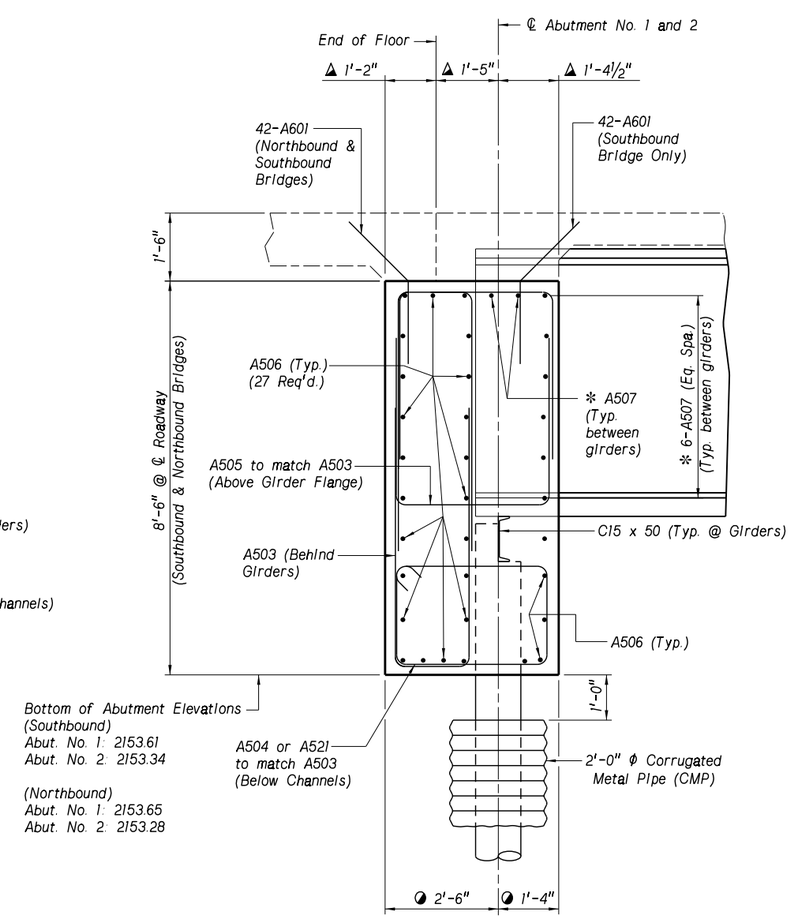

SECTION B-B

Southbound Bridge Abutment Shown,
At Girders
See sheet 13 of 48 for location of Section B-B
See Section C-C on sheet 17 of 48 for Northbound Bridge Section of Abutment
Not to Scale

BRIDGE ENGINEER

PROFESSIONAL CIVIL ENGINEER MARK J. TRAYNOWICZ E-8119 STATE OF NEBRASKA

332'-0" 2-SPAN PRESTRESSED (NU-1800) GIRDER BRIDGE
ABUTMENT AND TIE ROD DETAILS

COUNTY BUFFALO
HWY. NO. N-10
REF. POST. 54.43
STA. 148+18.22

LOCATION KEARNEY EAST BYPASS (11th ST. TO 56th ST.)
SKEW 14° LHB
ROADWAY 39'-0"
DESIGN LIVE LOAD HL-93

DATE APRIL 2013
DETAILED BY MR
CHECKED BY MJA
DESIGNED BY SS

STATE OF NEBRASKA - DEPARTMENT OF ROADS - BRIDGE DIVISION

NDOR Nebraska Department of Roads

PROFESSIONAL STRUCTURAL ENGINEER M.J. STEVE SABRA E-8112 STATE OF NEBRASKA

SPECIAL PLAN NO.	14 / 48
1	

File: c010 05443l&r_b.dgn Date: 02-JUL-2013 11:06 User: dor2062 Computer: DRBRIDGE29

PRELIMINARY

▲ Measured along ℄ Wing

▲ Measured perpendicular to ℄ Wing

★ Field cut A516 bars as necessary to maintain 1" clearance from bearing piles. Apply epoxy coating to bar ends.

See Plan View of Abutment on sheet 12 of 48 for placement of bars.

See sheet 18 of 48 for Abutment Bill of Bars.

◑ 1½" Preformed Joint Filler (Sponge Rubber Type)

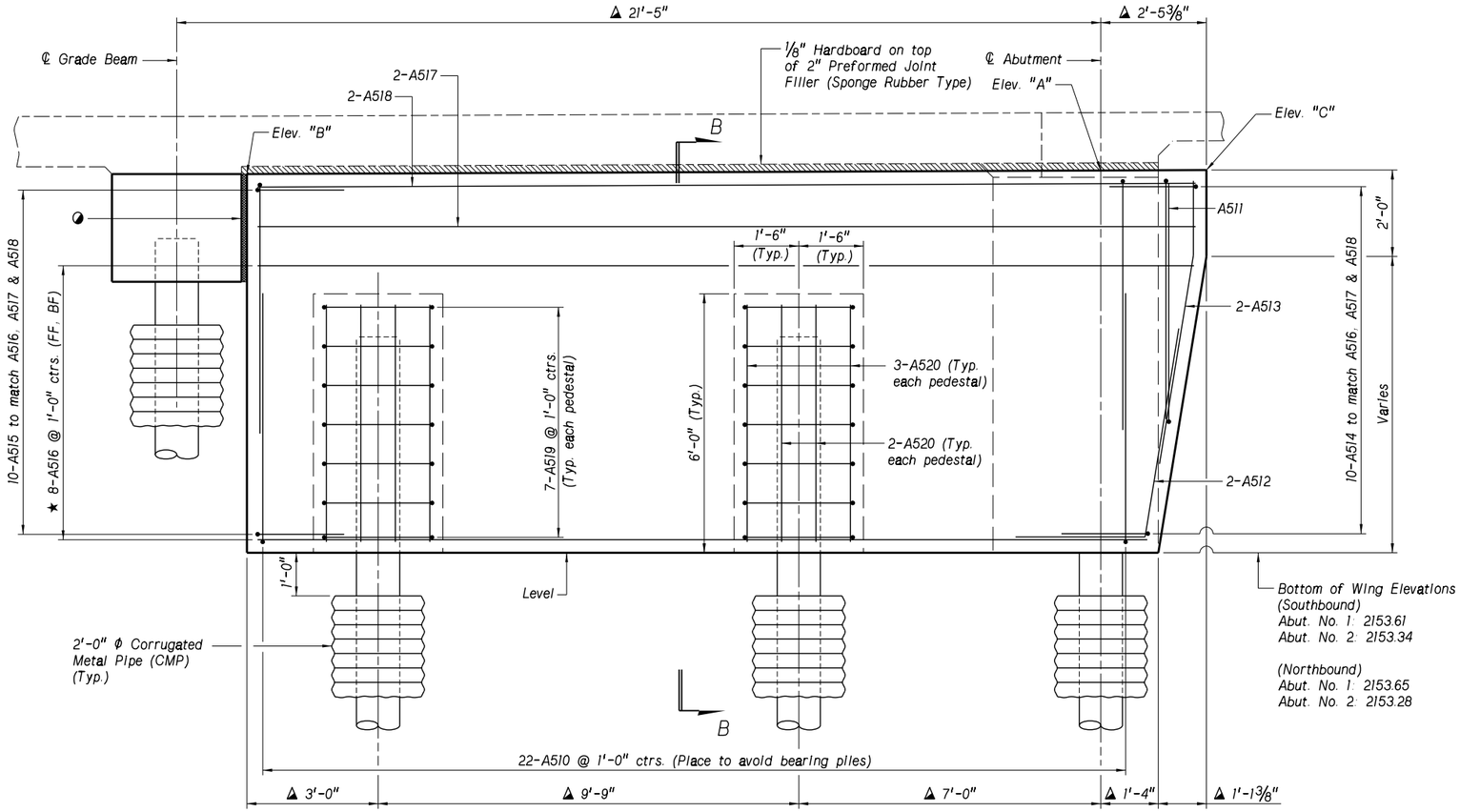

ELEVATION OF WING

Not to Scale

WING ELEVATIONS							
	Southbound Bridge				Northbound Bridge		
Abutment No. 1	Elev. "A"	Elev. "B"	Elev. "C"	Abutment No. 1	Elev. "A"	Elev. "B"	Elev. "C"
West Wing	2161.80	2161.73	2161.81	West Wing	2162.65	2162.59	2162.66
East Wing	2162.65	2162.58	2162.65	East Wing	2161.86	2161.80	2161.87
Abutment No. 2	Elev. "A"	Elev. "B"	Elev. "C"	Abutment No. 2	Elev. "A"	Elev. "B"	Elev. "C"
West Wing	2161.57	2161.48	2161.58	West Wing	2162.31	2162.21	2162.32
East Wing	2162.35	2162.25	2162.36	East Wing	2161.44	2161.34	2161.45

Elevations "A", "B" and "C" are located at the outside edge of wing wall.

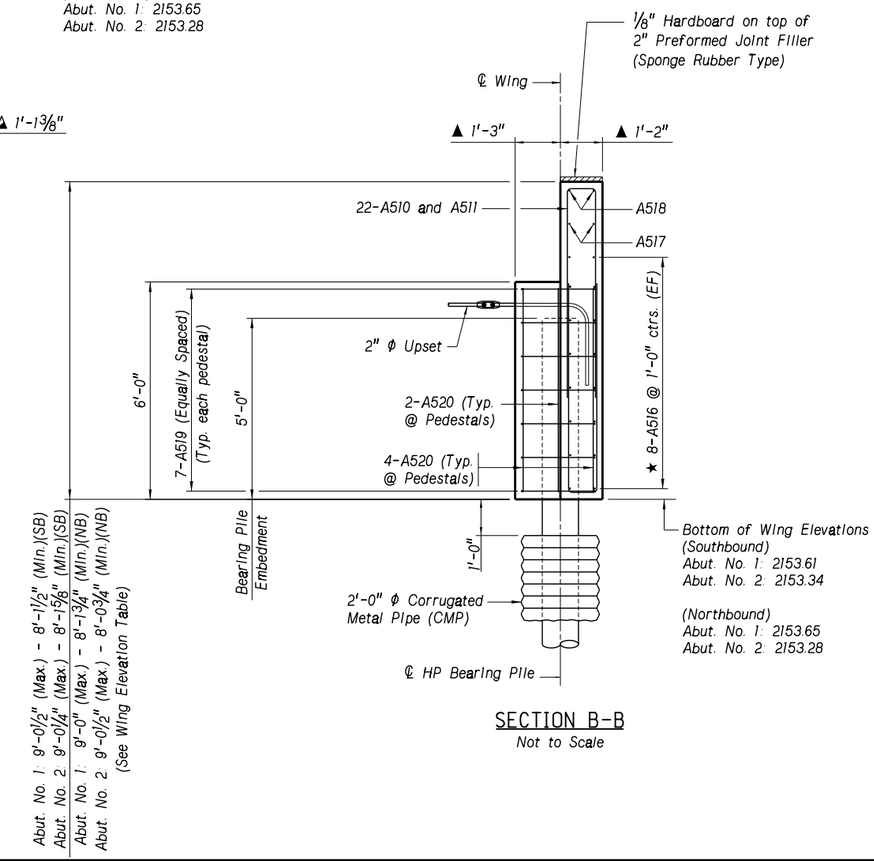

SECTION B-B

Not to Scale

PROJECT NUMBER	SHEET NO.
10-2(116)	

C.N. 42103B

STRUCTURE NUMBER S010 05443 L&R

PROFESSIONAL CIVIL ENGINEER MARK J. TRAYNOWICZ E-8119 STATE OF NEBRASKA

BRIDGE ENGINEER

332'-0" 2-SPAN PRESTRESSED (NU-1800) GIRDER BRIDGE

WING DETAILS

COUNTY BUFFALO | LOCATION KEARNEY EAST BYPASS (11th ST. TO 56th ST.) | DATE APRIL 2013

HWY. NO. N-10 | SKEW 14° LHB | CHECKED BY MJA

REF. POST. 54.43 | ROADWAY 39'-0" | DESIGN LIVE LOAD HL-93

STA. 148+18.22 | DESIGNED BY SS | DETAILED BY MR

STATE OF NEBRASKA - DEPARTMENT OF ROADS - BRIDGE DIVISION

NDOR Nebraska Department of Roads

PROFESSIONAL STRUCTURAL ENGINEER M.J. STEVE SABRA E-8112 STATE OF NEBRASKA

SPECIAL PLAN NO. 1

File: c010 05443\8r_b.dgn Date: 02-JUL-2013 11:07 User: dor2062 Computer: DRBRIDGE29

PRELIMINARY

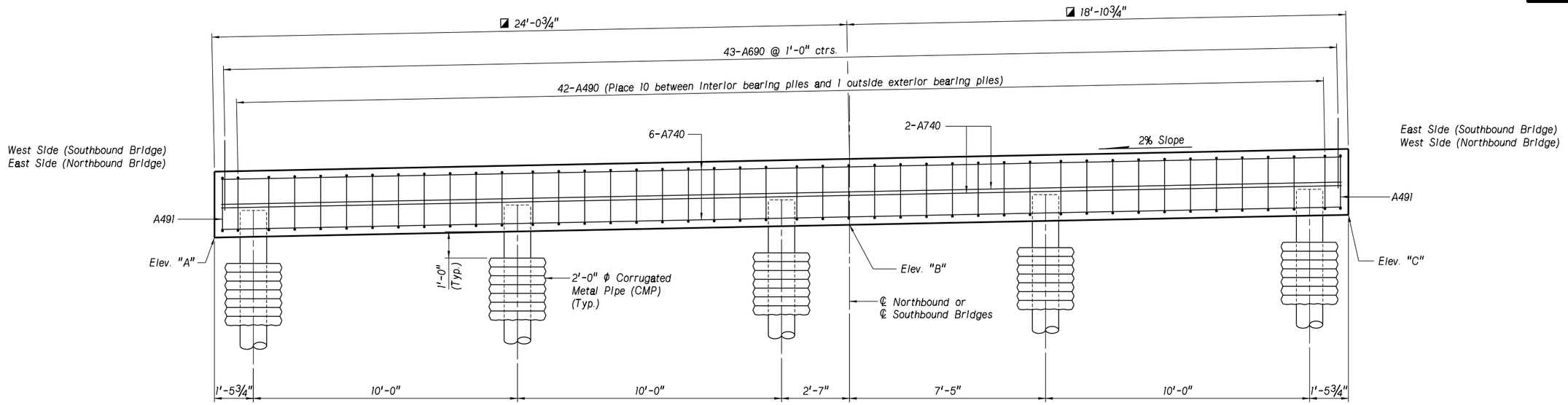

ELEVATION VIEW OF GRADE BEAM

Southbound Bridge Grade Beam No. 1 Shown, Grade Beam No. 2 Similar
Northbound Bridge Grade Beam No. 1 and 2 Similar and Opposite
Not to Scale

BOTTOM OF GRADE BEAM ELEVATIONS					
SOUTHBOUND BRIDGE			NORTHBOUND BRIDGE		
	Grade Beam No. 1	Grade Beam No. 2		Grade Beam No. 1	Grade Beam No. 2
Elev. "A"	2159.22	2158.96	Elev. "A"	2159.30	2158.83
Elev. "B"	2159.70	2159.40	Elev. "B"	2159.75	2159.33
Elev. "C"	2160.09	2159.74	Elev. "C"	2160.10	2159.72

◪ Measured along ℄ Grade Beam

See Plan View of Abutment on sheet 12 of 48 for placement of bars.

See sheet 18 of 48 for Abutment Bill of Bars.

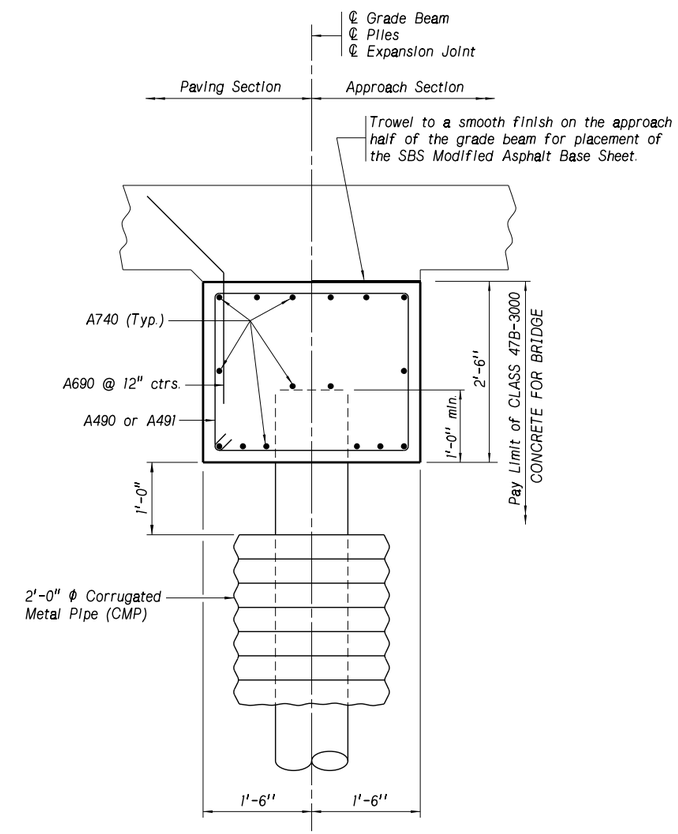

GRADE BEAM SECTION

Scale: 1" = 1'-0"

PROJECT NUMBER	SHEET NO.
10-2(116)	

C.N. 42103B

STRUCTURE NUMBER
S010 05443 L&R

PROFESSIONAL CIVIL ENGINEER MARK J. TRAYNOWICZ E-8119 STATE OF NEBRASKA

BRIDGE ENGINEER

332'-0" 2-SPAN PRESTRESSED (NU-1800) GIRDER BRIDGE
GRADE BEAM DETAILS

COUNTY BUFFALO
HWY. NO. N-10
REF. POST. 54.43
STA. 148+18.22

LOCATION KEARNEY EAST BYPASS (11th ST. TO 56th ST.)
SKEW 14° LHB
ROADWAY 39'-0"
DESIGN LIVE LOAD HL-93

DATE APRIL 2013
DESIGNED BY SS
DETAILED BY MR
CHECKED BY MJA

STATE OF NEBRASKA - DEPARTMENT OF ROADS - BRIDGE DIVISION

NDOR Nebraska Department of Roads

PROFESSIONAL STRUCTURAL ENGINEER M.J. STEVE SABRA E-8112 STATE OF NEBRASKA

SPECIAL PLAN NO. 1

File: c010 05443l&r_b.dgn Date: 02-JUL-2013 11:08 User: dor2062 Computer: DRBRIDGE29

PRELIMINARY

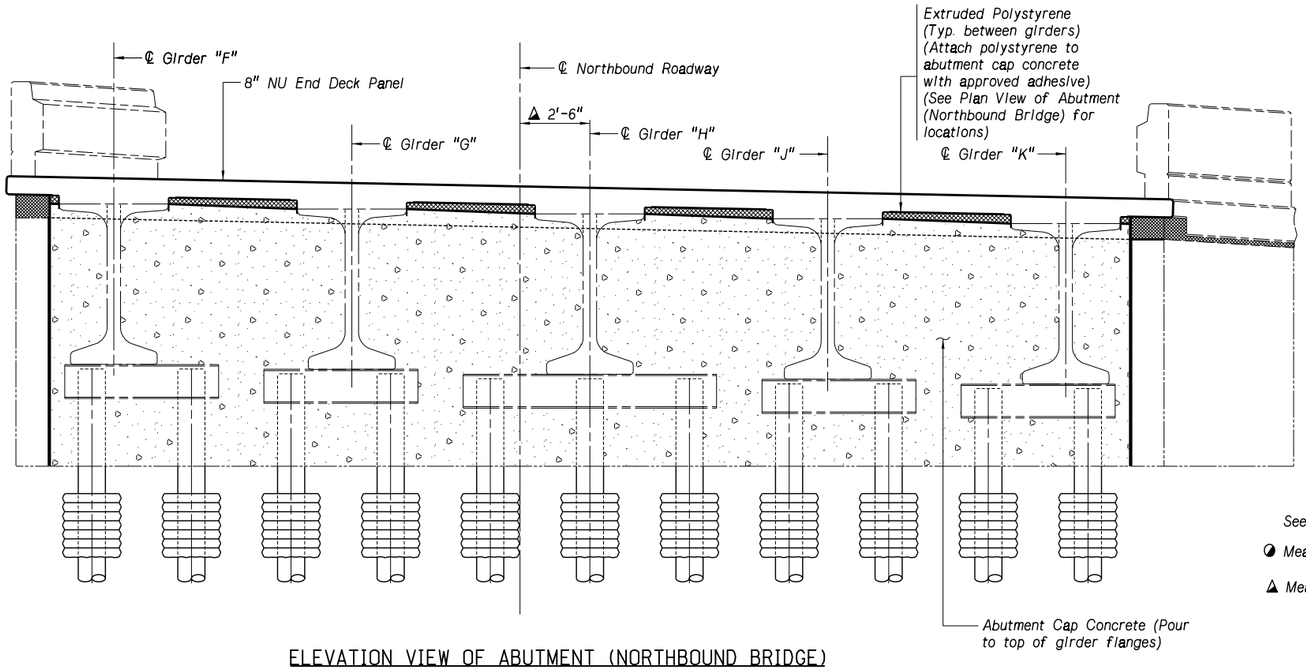

ELEVATION VIEW OF ABUTMENT (NORTHBOUND BRIDGE)

Abutment No. 2 Shown, Abutment No. 1 Opposite

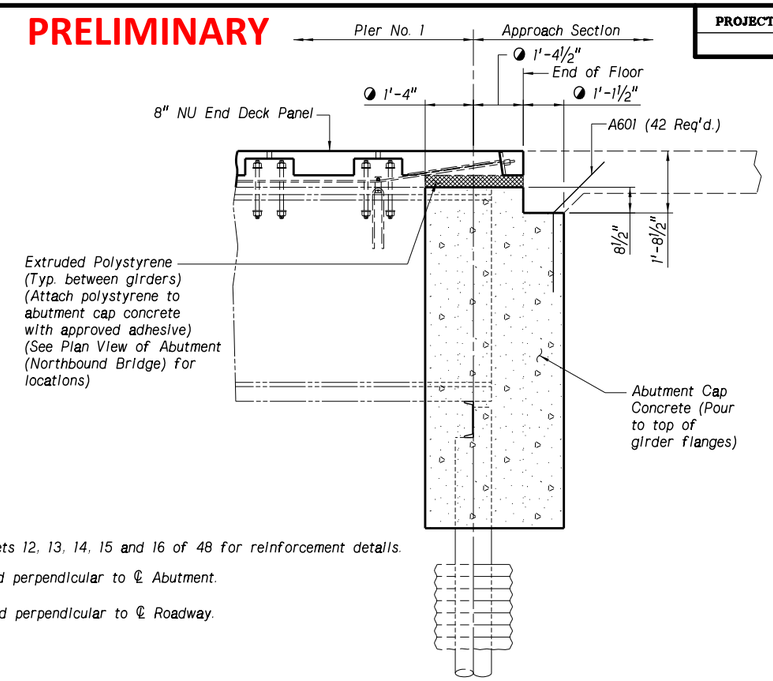

See sheets 12, 13, 14, 15 and 16 of 48 for reinforcement details.

◑ *Measured perpendicular to ℄ Abutment.*

◭ *Measured perpendicular to ℄ Roadway.*

SECTION C-C

Northbound Structure

Abutment No. 2 Shown, Abutment No. 1 Opposite

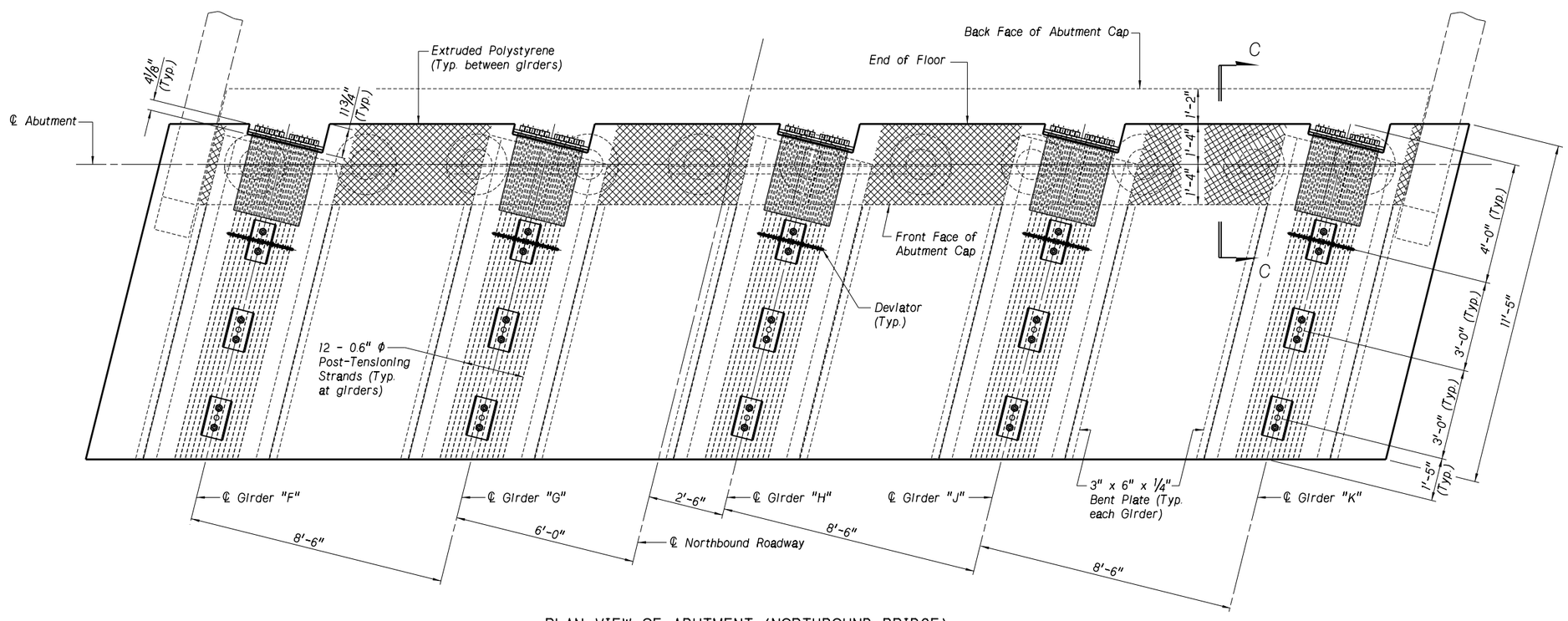

PLAN VIEW OF ABUTMENT (NORTHBOUND BRIDGE)

Abutment No. 2 Shown, Abutment No. 1 Opposite

PROJECT NUMBER	SHEET NO.
10-2(116)	

C.N. 42103B

STRUCTURE NUMBER S010 05443 L&R

PROFESSIONAL CIVIL ENGINEER MARK J. TRAYNOWICZ E-8119 STATE OF NEBRASKA

BRIDGE ENGINEER

332'-0" 2-SPAN PRESTRESSED (NU-1800) GIRDER BRIDGE

ABUTMENT DETAILS (NORTHBOUND BRIDGE)

COUNTY BUFFALO
HWY. NO. N-10
REF. POST. 54.43
STA. 148+18.22

LOCATION KEARNEY EAST BYPASS (11th ST. TO 56th ST.)
SKEW 14° LHB
ROADWAY 39'-0"
DESIGN LIVE LOAD HL-93

DATE APRIL 2013

DESIGNED BY NDOR
DETAILED BY MR
CHECKED BY FJ

STATE OF NEBRASKA - DEPARTMENT OF ROADS - BRIDGE DIVISION

NDOR Nebraska Department of Roads

PROFESSIONAL CIVIL ENGINEER FOUAD AH JABER E-8111 STATE OF NEBRASKA

SPECIAL PLAN NO. 1

17 / 48

File: c010 05443\&r_b.dgn Date: 02-JUL-2013 11:09 User: dor2062 Computer: DRBRIDGE29

BILL OF BARS (SOUTHBOUND BRIDGE)

	MARK	NO.	LENGTH	TYPE	"A"	"B"	"C"	"D"	"E"	"F"	PIN	HOOK	WEIGHT LB
ABUTMENT NO. 1	A790	16	42'-5"	STR.									
	A601	84	3'-8"	101	1'-10"	1'-10"	1'-3½"				4½"		
	A690	43	3'-8"	101	1'-10"	1'-10"	1'-3½"				4½"		
	A502	23	30'-4"	108	5'-11"	3'-4"	5'-11"	Varies			2½"		
	A503	42	27'-0"	108	5'-11"	1'-8"	5'-11"	Varies			2½"		
	A504	34	9'-7"	107	1'-0"	3'-4"					2½"	5½"	
	A505	26	22'-8"	108	4'-0"	3'-4"	4'-0"	Varies			2½"		
	A506	28	39'-2"	STR.									
	A507	30	8'-0"	STR.									
	A508	16	1'-9"	STR.									
	A509	2	30'-10"	108	6'-0"	3'-5"	6'-0"	Varies			2½"		
	A510	44	24'-4"	108	5'-9"	0'-8"	5'-9"	Varies			2½"		
	A511	2	23'-4"	108	5'-6"	0'-8"	5'-6"	Varies			2½"		
	A512	4	7'-11"	105	4'-11"	3'-0"	0'-5¾"				2½"		
	A513	4	6'-8"	101	4'-11"	1'-9"	0'-3¼"				2½"		
	A514	20	4'-8"	103	2'-0"	0'-8"	2'-0"				2½"		
	A515	20	4'-8"	133	2'-0"	0'-8"	2'-0"	0'-2"			2½"		
	A516	32	21'-2" Avg.	STR.									
	A517	4	21'-9"	STR.									
	A518	4	21'-10"	STR.									
	A519	28	9'-5"	107	1'-10"	2'-5"					2½"	5½"	
	A520	40	5'-6"	STR.									
	A521	8	11'-3"	107	1'-10"	3'-4"					2½"	5½"	
	A522	13	24'-4"	108	4'-5"	3'-4"	4'-5"	Varies			2½"		
	A490	42	9'-9"	107	2'-0"	2'-6"					2"	4½"	
	A491	2	9'-11"	107	2'-0"	2'-7"					2"	4½"	
											SUBTOTAL =		LB
ABUTMENT NO. 2	A790	16	42'-5"	STR.									
	A601	84	3'-8"	101	1'-10"	1'-10"	1'-3½"				4½"		
	A690	43	3'-8"	101	1'-10"	1'-10"	1'-3½"				4½"		
	A502	23	30'-4"	108	5'-11"	3'-4"	5'-11"	Varies			2½"		
	A503	42	27'-0"	108	5'-11"	1'-8"	5'-11"	Varies			2½"		
	A504	34	9'-7"	107	1'-0"	3'-4"					2½"	5½"	
	A505	26	22'-8"	108	4'-0"	3'-4"	4'-0"	Varies			2½"		
	A506	28	39'-2"	STR.									
	A507	30	8'-0"	STR.									
	A508	16	1'-9"	STR.									
	A509	2	30'-10"	108	6'-0"	3'-5"	6'-0"	Varies			2½"		
	A510	44	24'-4"	108	5'-9"	0'-8"	5'-9"	Varies			2½"		
	A511	2	23'-4"	108	5'-6"	0'-8"	5'-6"	Varies			2½"		
	A512	4	7'-11"	105	4'-11"	3'-0"	0'-5¾"				2½"		
	A513	4	6'-8"	101	4'-11"	1'-9"	0'-3¼"				2½"		
	A514	20	4'-8"	103	2'-0"	0'-8"	2'-0"				2½"		
	A515	20	4'-8"	133	2'-0"	0'-8"	2'-0"	0'-2"			2½"		
	A516	32	21'-2" Avg.	STR.									
	A517	4	21'-9"	STR.									
	A518	4	21'-10"	STR.									
	A519	28	9'-5"	107	1'-10"	2'-5"					2½"	5½"	
	A520	40	5'-6"	STR.									
	A521	8	11'-3"	107	1'-10"	3'-4"					2½"	5½"	
	A522	13	24'-4"	108	4'-5"	3'-4"	4'-5"	Varies			2½"		
	A490	42	9'-9"	107	2'-0"	2'-6"					2"	4½"	
	A491	2	9'-11"	107	2'-0"	2'-7"					2"	4½"	
											SUBTOTAL =		LB
											TOTAL =		LB

BILL OF BARS (NORTHBOUND BRIDGE)

	MARK	NO.	LENGTH	TYPE	"A"	"B"	"C"	"D"	"E"	"F"	PIN	HOOK	WEIGHT LB
ABUTMENT NO. 1	A790	16	42'-5"	STR.									1387
	A601	42	3'-8"	101	1'-10"	1'-10"	1'-3½"				4½"		231
	A690	43	3'-8"	101	1'-10"	1'-10"	1'-3½"				4½"		237
	A502	23	30'-4"	108	5'-11"	3'-4"	5'-11"	Varies			2½"		728
	A503	42	27'-0"	108	5'-11"	1'-8"	5'-11"	Varies			2½"		1183
	A504	34	9'-7"	107	1'-0"	3'-4"					2½"	5½"	340
	A505	26	22'-8"	108	4'-0"	3'-4"	4'-0"	Varies			2½"		615
	A506	28	39'-2"	STR.									1144
	A507	30	8'-0"	STR.									250
	A508	16	1'-9"	STR.									29
	A509	2	30'-10"	108	6'-0"	3'-5"	6'-0"	Varies			2½"		64
	A510	44	24'-4"	108	5'-9"	0'-8"	5'-9"	Varies			2½"		1117
	A511	2	23'-4"	108	5'-6"	0'-8"	5'-6"	Varies			2½"		49
	A512	4	7'-11"	105	4'-11"	3'-0"	0'-5¾"				2½"		33
	A513	4	6'-8"	101	4'-11"	1'-9"	0'-3¼"				2½"		28
	A514	20	4'-8"	103	2'-0"	0'-8"	2'-0"				2½"		97
	A515	20	4'-8"	133	2'-0"	0'-8"	2'-0"	0'-2"			2½"		97
	A516	32	21'-2" Avg.	STR.									706
	A517	4	21'-9"	STR.									91
	A518	4	21'-10"	STR.									91
	A519	28	9'-5"	107	1'-10"	2'-5"					2½"	5½"	275
	A520	40	5'-6"	STR.									229
	A521	8	11'-3"	107	1'-10"	3'-4"					2½"	5½"	94
	A522	13	24'-4"	108	4'-5"	3'-4"	4'-5"	Varies			2½"		330
	A490	42	9'-9"	107	2'-0"	2'-6"					2"	4½"	274
	A491	2	9'-11"	107	2'-0"	2'-7"					2"	4½"	13
											SUBTOTAL =		9732 LB
ABUTMENT NO. 2	A790	16	42'-5"	STR.									1387
	A601	42	3'-8"	101	1'-10"	1'-10"	1'-3½"				4½"		231
	A690	43	3'-8"	101	1'-10"	1'-10"	1'-3½"				4½"		237
	A502	23	30'-4"	108	5'-11"	3'-4"	5'-11"	Varies			2½"		728
	A503	42	27'-0"	108	5'-11"	1'-8"	5'-11"	Varies			2½"		1183
	A504	34	9'-7"	107	1'-0"	3'-4"					2½"	5½"	340
	A505	26	22'-8"	108	4'-0"	3'-4"	4'-0"	Varies			2½"		615
	A506	28	39'-2"	STR.									1144
	A507	30	8'-0"	STR.									250
	A508	16	1'-9"	STR.									29
	A509	2	30'-10"	108	6'-0"	3'-5"	6'-0"	Varies			2½"		64
	A510	44	24'-4"	108	5'-9"	0'-8"	5'-9"	Varies			2½"		1117
	A511	2	23'-4"	108	5'-6"	0'-8"	5'-6"	Varies			2½"		49
	A512	4	7'-11"	105	4'-11"	3'-0"	0'-5¾"				2½"		33
	A513	4	6'-8"	101	4'-11"	1'-9"	0'-3¼"				2½"		28
	A514	20	4'-8"	103	2'-0"	0'-8"	2'-0"				2½"		97
	A515	20	4'-8"	133	2'-0"	0'-8"	2'-0"	0'-2"			2½"		97
	A516	32	21'-2" Avg.	STR.									706
	A517	4	21'-9"	STR.									91
	A518	4	21'-10"	STR.									91
	A519	28	9'-5"	107	1'-10"	2'-5"					2½"	5½"	275
	A520	40	5'-6"	STR.									229
	A521	8	11'-3"	107	1'-10"	3'-4"					2½"	5½"	94
	A522	13	24'-4"	108	4'-5"	3'-4"	4'-5"	Varies			2½"		330
	A490	42	9'-9"	107	2'-0"	2'-6"					2"	4½"	274
	A491	2	9'-11"	107	2'-0"	2'-7"					2"	4½"	13
											SUBTOTAL =		9732 LB
											TOTAL =		19464 LB

PRELIMINARY

PROJECT NUMBER	SHEET NO.
10-2(116)	

C.N. 42103B

STRUCTURE NUMBER
S010 05443 L&R

BAR SETS (ABUT. NO. 1) (SOUTHBOUND BRIDGE)

MARK	MAX. LENGTH	MIN. LENGTH	NO. OF SETS	BARS PER SET
A516	21'-8"	20'-8"	4	8

BAR SETS (ABUT. NO. 2) (SOUTHBOUND BRIDGE)

MARK	MAX. LENGTH	MIN. LENGTH	NO. OF SETS	BARS PER SET
A516	21'-8"	20'-8"	4	8

BAR SETS (ABUT. NO. 1) (NORTHBOUND)

MARK	MAX. LENGTH	MIN. LENGTH	NO. OF SETS	BARS PER SET
A516	21'-8"	20'-8"	4	8

BAR SETS (ABUT. NO. 2) (NORTHBOUND BRIDGE)

MARK	MAX. LENGTH	MIN. LENGTH	NO. OF SETS	BARS PER SET
A516	21'-8"	20'-8"	4	8

THE NUMBER OF LAP SPLICES ARE CALCULATED BASED ON 60'-0" LENGTHS OF REINFORCING STEEL BARS.
SPLICES ON BARS SHORTER THAN 60'-0" WILL REQUIRE ADDITIONAL LAP SPLICES AT NO ADDITIONAL EXPENSE TO NDOR.

NOTE:
FOR BENDING DIAGRAMS, HOOK LENGTHS, & PIN DIAMETERS SEE SHEET 42 OF 48.

PROFESSIONAL CIVIL ENGINEER
MARK J. TRAYNOWICZ
E-8119
STATE OF NEBRASKA

BRIDGE ENGINEER

332'-0" 2-SPAN PRESTRESSED (NU-1800) GIRDER BRIDGE
ABUTMENT BILL OF BARS

LOCATION KEARNEY EAST BYPASS (11th ST. TO 56th ST.)
SKEW 14° LHB
ROADWAY 39'-0"
DESIGN LIVE LOAD HL-93
COUNTY BUFFALO
HWY. NO. N-10
REF. POST. 54.43
STA. 148+18.22
DESIGNED BY SS **DETAILED BY** MR **CHECKED BY** MJA **BY** MJA **DATE** APRIL 2013

STATE OF NEBRASKA - DEPARTMENT OF ROADS - BRIDGE DIVISION

NDOR
Nebraska Department of Roads

PROFESSIONAL STRUCTURAL ENGINEER
M.J. STEVE SABRA
E-8112
STATE OF NEBRASKA

SPECIAL PLAN NO. 1

File: c010 05443l&r_b.dgn Date: 02-JUL-2013 11:10 User: dor2062 Computer: DRBRIDGE29

PRELIMINARY

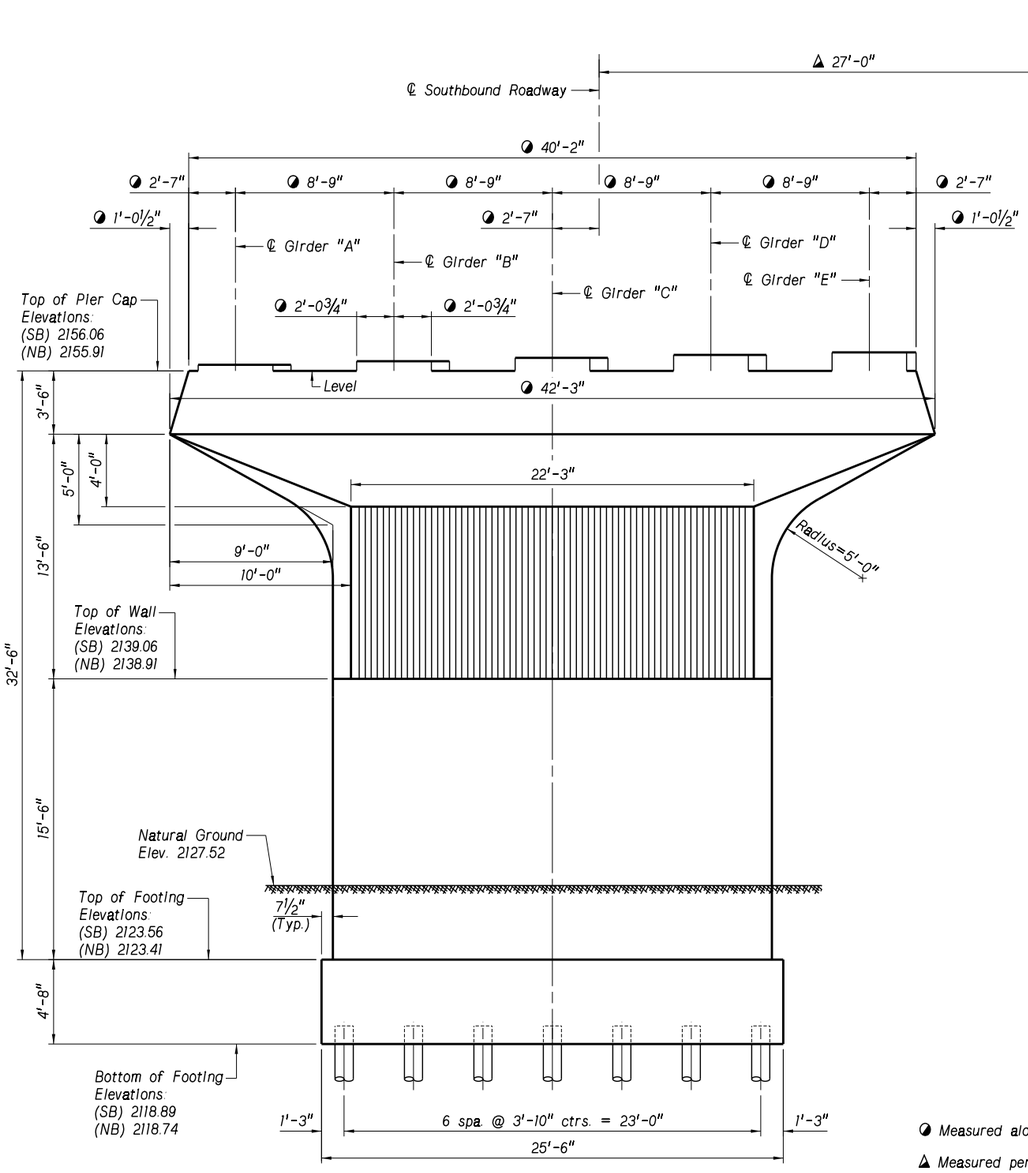

Southbound Pier No. 1
Showing Dimensions
Northbound Pier No. 1 Dimensions
Identical to Southbound Pier No. 1

PIER GIRDER SEAT ELEVATIONS			
SOUTHBOUND BRIDGE		NORTHBOUND BRIDGE	
	Pier No. 1		Pier No. 1
Girder "A"	2156.39	Girder "F"	2156.93
Girder "B"	2156.60	Girder "G"	2156.76
Girder "C"	2156.77	Girder "H"	2156.59
Girder "D"	2156.93	Girder "J"	2156.41
Girder "E"	2157.06	Girder "K"	2156.24

◑ Measured along ℄ Pier

◭ Measured perpendicular to ℄ Project

★ Field cut P513 bars as necessary to maintain 3" clearance. Apply epoxy coating to cut bar ends.

See sheet 22 of 47 for Section A-A and B-B.

See Plan View of Footing on sheet 21 of 47 for pile layout.

See sheet 30 of 47 for bearing details.

See sheet 23 of 47 for Pier Bill of Bars.

FF: Front Face
BF: Back Face
EF: Each Face

ELEVATION OF PIER NO. 1

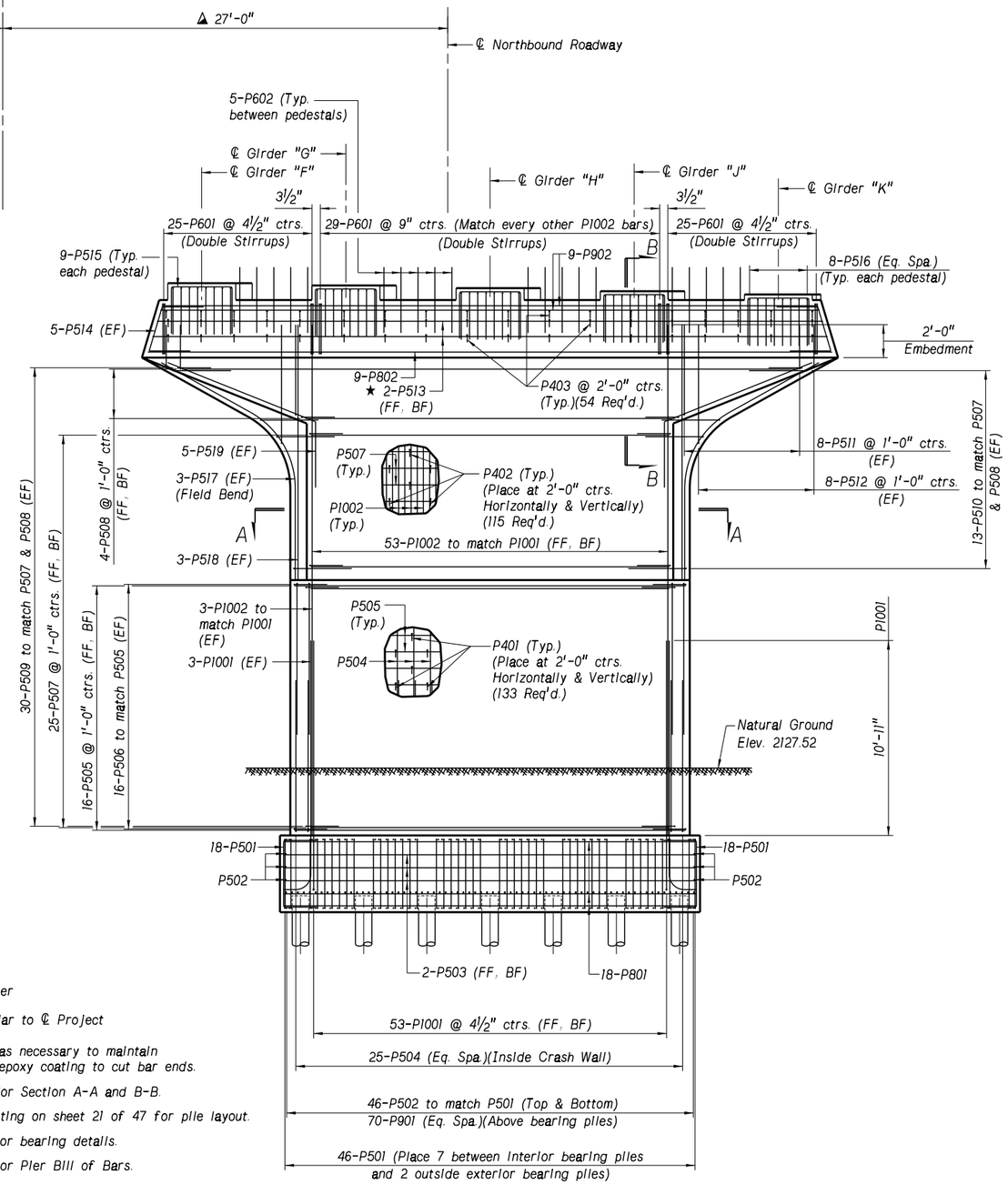

Northbound Pier No. 1
Showing Reinforcement
Southbound Pier No. 1 Reinforcment
Identical to Northbound Pier No. 1

PROJECT NUMBER	SHEET NO.
10-2(116)	

C.N. 42103B

STRUCTURE NUMBER S010 05443 L&R

PROFESSIONAL CIVIL ENGINEER MARK J. TRAYNOWICZ E-8119 STATE OF NEBRASKA

BRIDGE ENGINEER

332'-0" 2-SPAN PRESTRESSED (NU1800) GIRDER BRIDGE
ELEVATION OF PIER NO. 1

LOCATION KEARNEY EAST BYPASS
SKEW 14° LHB (11th ST. TO 56th ST.)
ROADWAY 39'-0"
DESIGN LIVE LOAD HL-93

DATE APRIL 2013
DETAILED BY MR
CHECKED BY MJA
DESIGNED BY SS

COUNTY BUFFALO
HWY. NO. N-10
REF. POST.
STA. 148+18.22

STATE OF NEBRASKA - DEPARTMENT OF ROADS - BRIDGE DIVISION

NDOR Nebraska Department of Roads

PROFESSIONAL STRUCTURAL ENGINEER M.J. STEVE SABRA E-8112 STATE OF NEBRASKA

SPECIAL PLAN NO. 1

File: c010 05443l&r_c.dgn Date: 02-JUL-2013 11:12 User: dor2062 Computer: DRBRIDGE29

PRELIMINARY

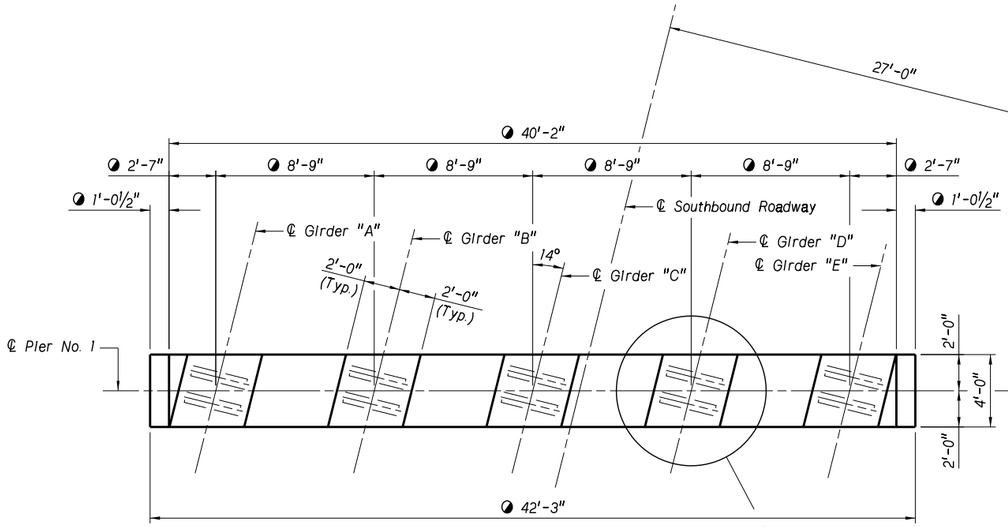

Southbound Pier Cap No. 1
Showing Dimensions
Northbound Pier Cap No. 1 Dimensions
Identical to Southbound Pier Cap No. 1

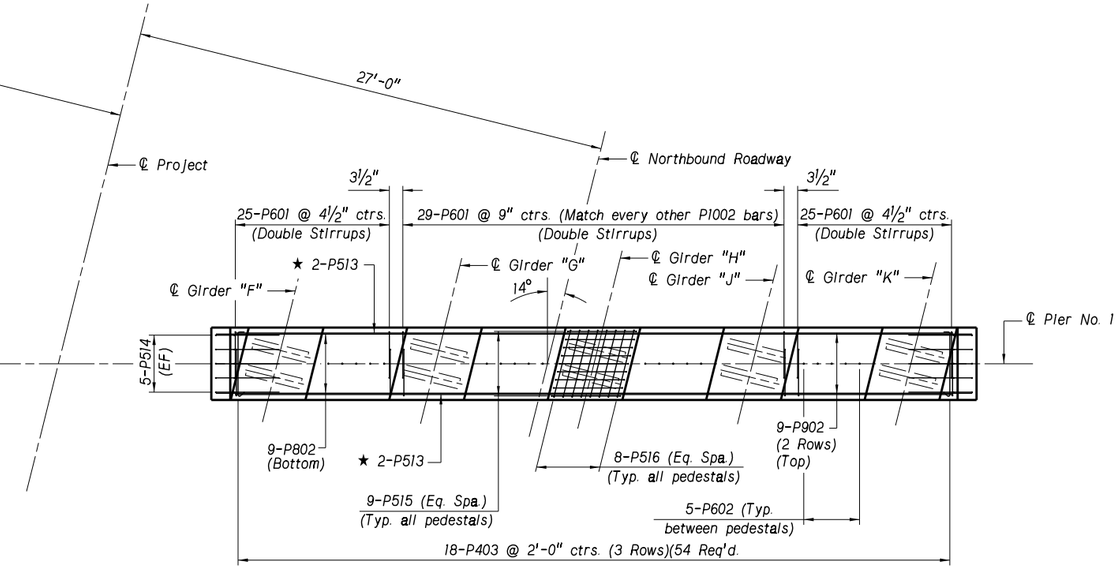

Northbound Pier Cap No. 1
Showing Reinforcement
Southbound Pier Cap No. 1 Reinforcment
Identical to Northbound Pier Cap No. 1

★ Field cut P513 bars as necessary to maintain 3" clearance. Apply epoxy coating to cut bar ends.

◑ Measured along ℄ Pier

See sheet 23 of 47 for Pier Bill of Bars.

See sheet 30 of 47 for bearing details.

PLAN VIEW OF PIER CAP NO. 1

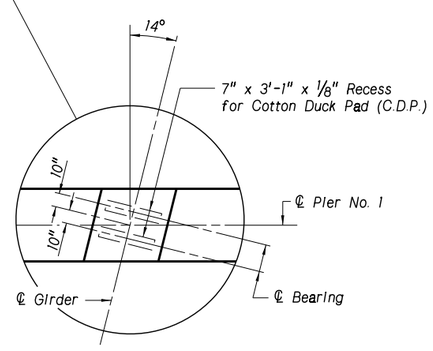

Typical All Girders

PROJECT NUMBER	SHEET NO.
10-2(116)	

C.N. 42103B

STRUCTURE NUMBER
S010 05443 L&R

PROFESSIONAL CIVIL ENGINEER MARK J. TRAYNOWICZ E-8119 STATE OF NEBRASKA

BRIDGE ENGINEER

332'-0" 2-SPAN PRESTRESSED (NU1800) GIRDER BRIDGE
PLAN VIEW OF PIER CAP

COUNTY BUFFALO
HWY. NO. N-10
REF. POST.
STA. 148+18.22

LOCATION KEARNEY EAST BYPASS
SKEW 14° LHB (11th ST. TO 56th ST.)
ROADWAY 39'-0"
DESIGN LIVE LOAD HL-93

DATE APRIL 2013

DESIGNED BY SS
DETAILED BY MR
CHECKED BY MJA

STATE OF NEBRASKA - DEPARTMENT OF ROADS - BRIDGE DIVISION

NDOR Nebraska Department of Roads

PROFESSIONAL STRUCTURAL ENGINEER M.J. STEVE SABRA E-8112 STATE OF NEBRASKA

SPECIAL PLAN NO. 1

File: c010 05443l&r_c.dgn Date: 02-JUL-2013 11:13 User: dor2062 Computer: DRBRIDGE29

PRELIMINARY

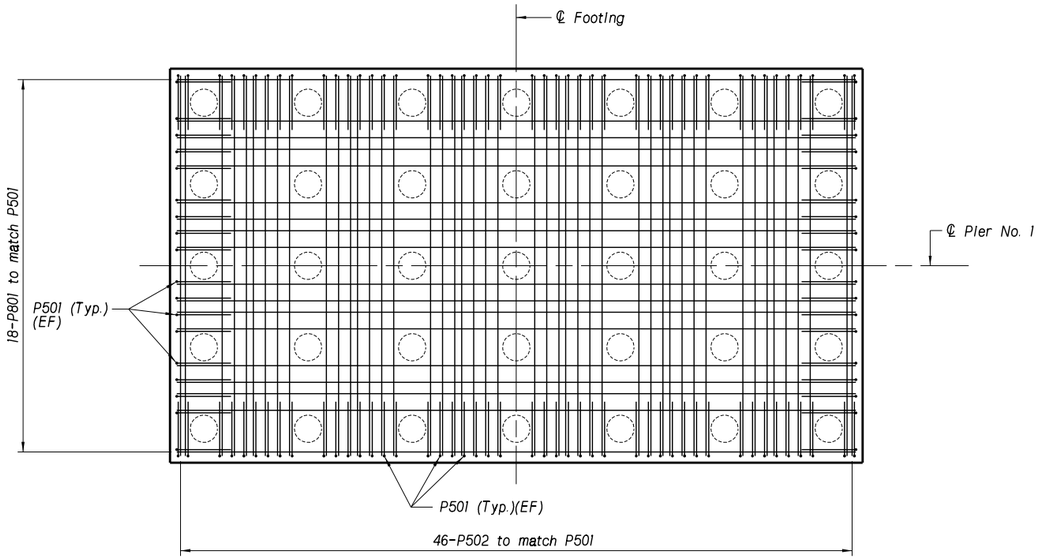

PLAN VIEW OF FOOTING (NORTHBOUND AND SOUTHBOUND)

Top Reinforcement Mat Shown
Not to Scale

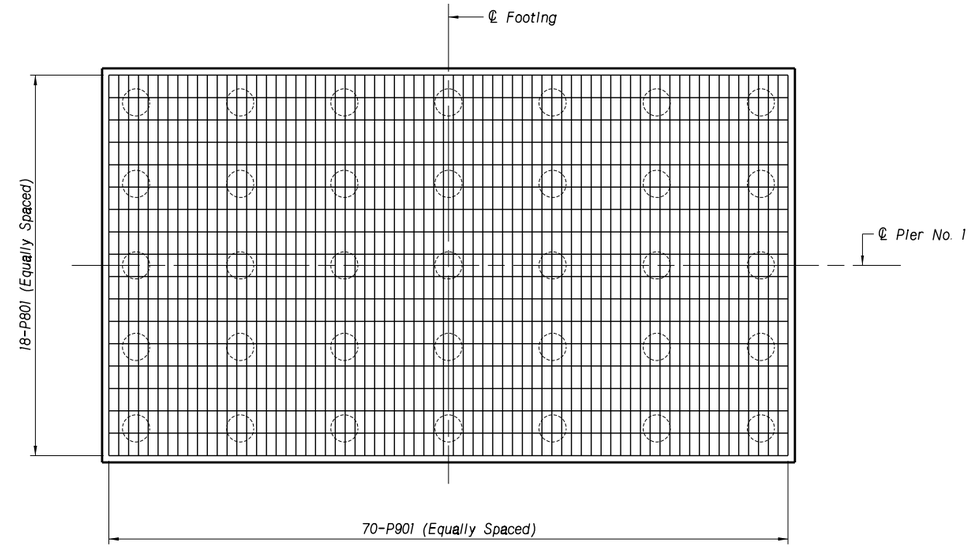

PLAN VIEW OF FOOTING (NORTHBOUND AND SOUTHBOUND)

Reinforcement Mat Above Bearing Piles Shown
Not to Scale

See sheet 23 of 47 for Pier Bill of Bars.
EF: Each Face

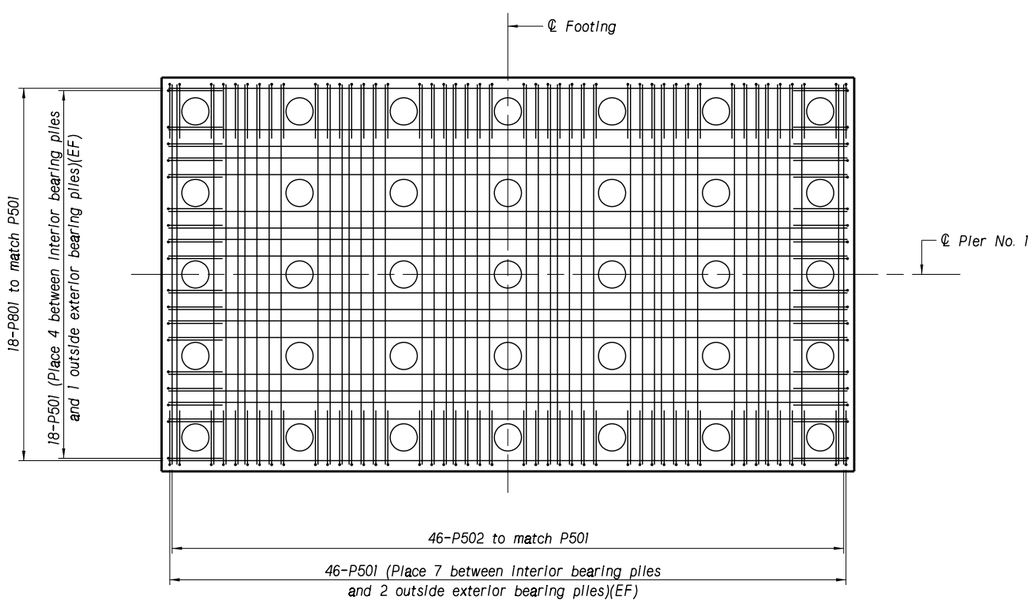

PLAN VIEW OF FOOTING (NORTHBOUND AND SOUTHBOUND)

Bottom Reinforcement Mat Shown
Not to Scale

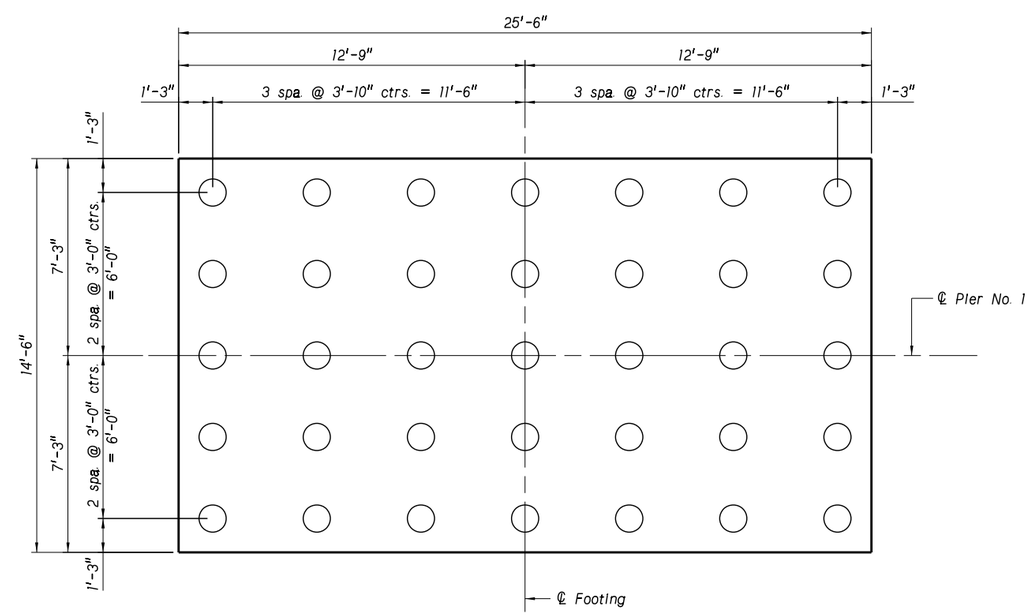

PLAN VIEW OF FOOTING (NORTHBOUND AND SOUTHBOUND)

Pile Layout Shown
Not to Scale

PROJECT NUMBER	SHEET NO.
10-2(116)	

C.N. 42103B

STRUCTURE NUMBER
S010 05443 L&R

PROFESSIONAL CIVIL ENGINEER
MARK J. TRAYNOWICZ
E-8119
STATE OF NEBRASKA

BRIDGE ENGINEER

332'-0" 2-SPAN PRESTRESSED (NU1800) GIRDER BRIDGE
PIER FOOTING DETAILS

LOCATION KEARNEY EAST BYPASS (11th ST. TO 56th ST.)
SKEW 14° LHB
ROADWAY 39'-0"
DESIGN LIVE LOAD HL-93

DATE APRIL 2013
DETAILED BY MR **CHECKED BY** MJA

COUNTY BUFFALO
HWY. NO. N-10
REF. POST.
STA. 148+18.22

DESIGNED BY SS

STATE OF NEBRASKA - DEPARTMENT OF ROADS - BRIDGE DIVISION

NDOR
Nebraska Department of Roads

PROFESSIONAL STRUCTURAL ENGINEER
M.J. STEVE SABRA
E-8112
STATE OF NEBRASKA

SPECIAL PLAN NO.	
1	21/48

File: c010 05443l&r_c.dgn Date: 02-JUL-2013 11:14 User: dor2062 Computer: DRBRIDGE29

PRELIMINARY

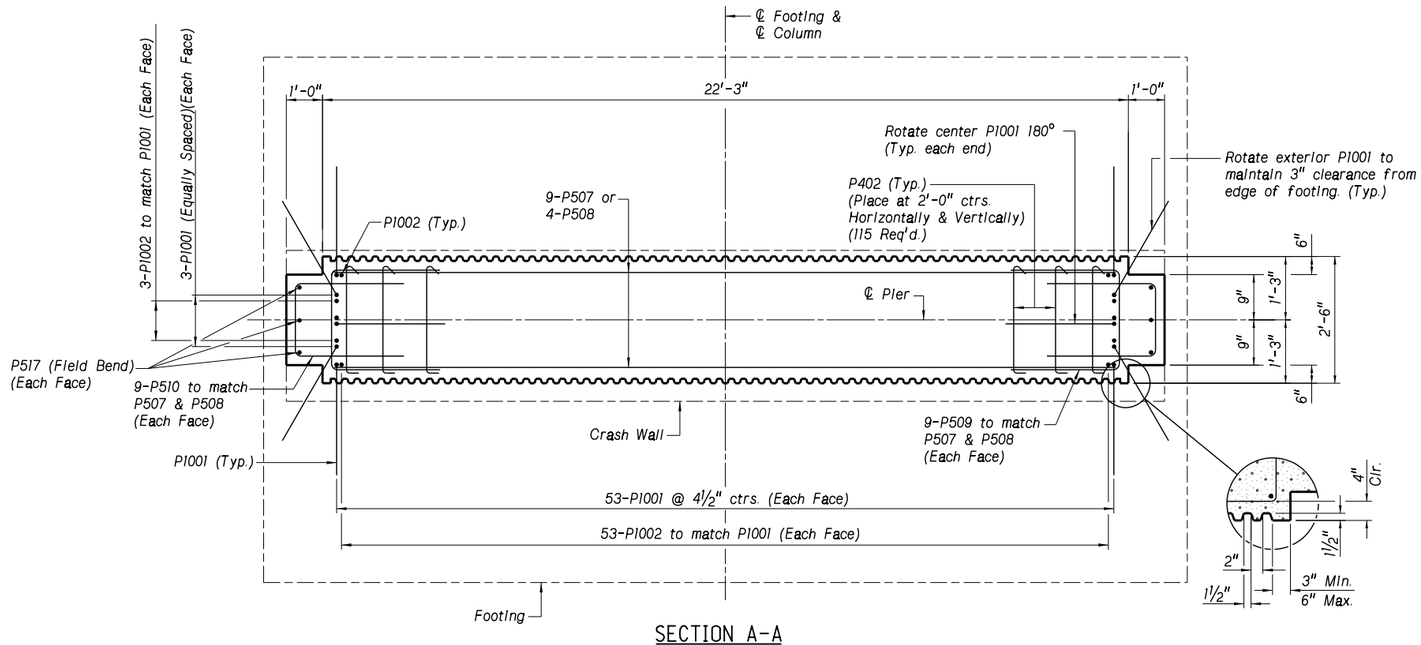

SECTION A-A

(See sheet 19 of 47 for location of Section A-A)
Not to Scale

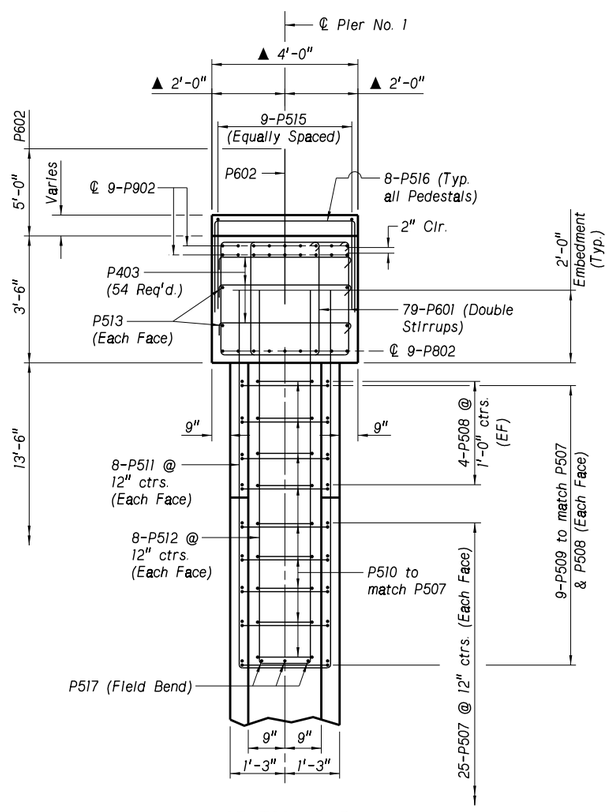

SECTION B-B

(See sheet 19 of 47 for location of Section B-B)
Not to Scale

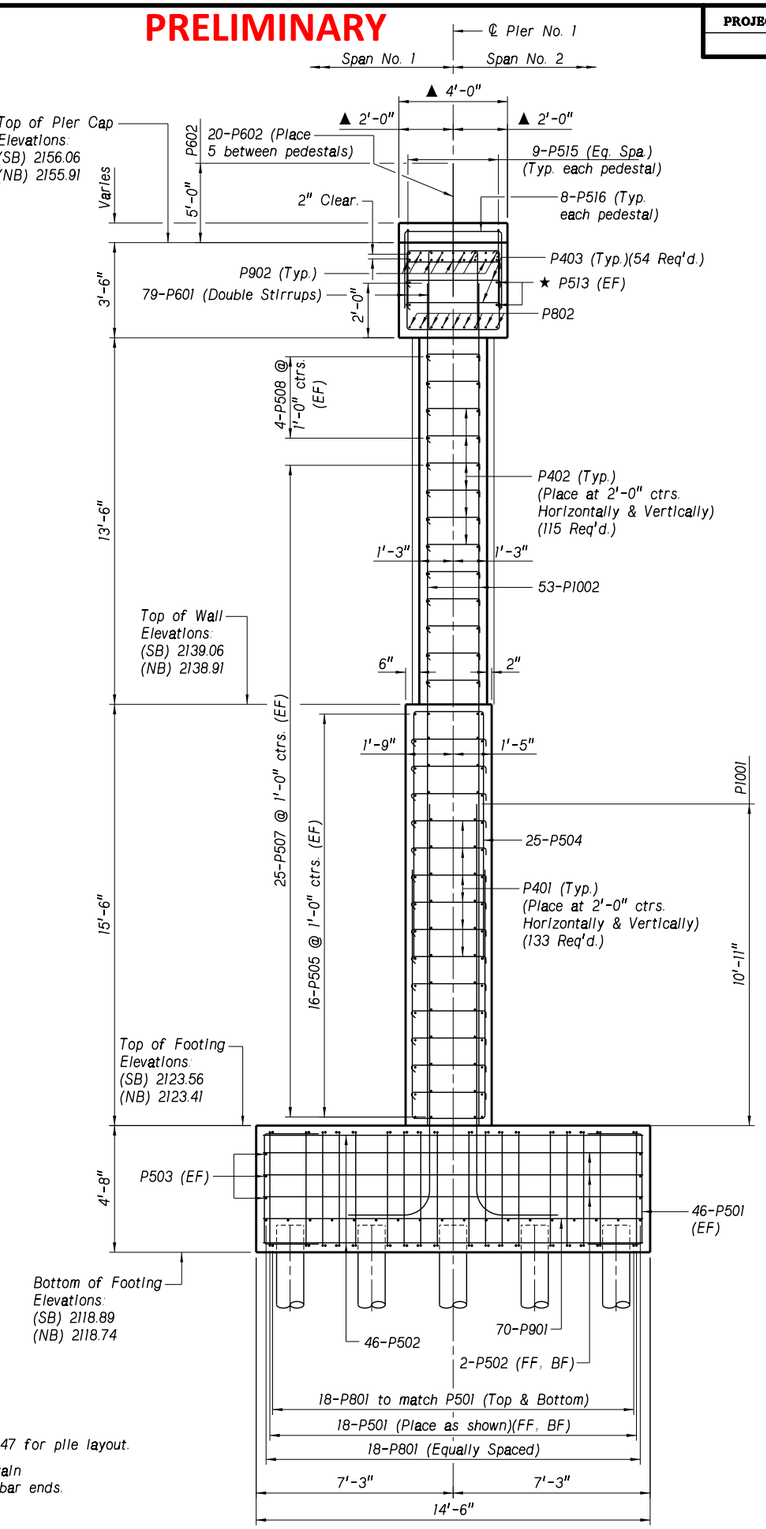

SECTION OF PIER NO. 1

Northbound and Southbound Identical
Not to Scale

BF: Back Face
FF: Front Face
EF: Each Face

See Plan View of Footing on sheet 21 of 47 for pile layout.

★ Field cut P513 bars as necessary to maintain 3" clearance. Apply epoxy coating to cut bar ends.

▲ Measured perpendicular to ℄ Pier No. 1

See sheet 23 of 47 for Pier Bill of Bars.

PROJECT NUMBER	SHEET NO.
10-2(116)	

C.N. 42103B

STRUCTURE NUMBER
S010 05443 L&R

PROFESSIONAL CIVIL ENGINEER MARK J. TRAYNOWICZ E-8119 STATE OF NEBRASKA

BRIDGE ENGINEER

332'-0" 2-SPAN PRESTRESSED (NU1800) GIRDER BRIDGE
PIER SECTIONS

LOCATION KEARNEY EAST BYPASS
SKEW 14° LHB (11th ST. TO 56th ST.)
ROADWAY 39'-0"
DESIGN LIVE LOAD HL-93

DATE APRIL 2013
DETAILED BY MR
CHECKED BY MJA

COUNTY BUFFALO
HWY. NO. N-10
REF. POST.
STA. 148+18.22
DESIGNED BY SS

STATE OF NEBRASKA - DEPARTMENT OF ROADS - BRIDGE DIVISION

NDOR Nebraska Department of Roads

PROFESSIONAL STRUCTURAL ENGINEER M.J. STEVE SABRA E-8112 STATE OF NEBRASKA

SPECIAL PLAN NO. 1

File: c010 05443l&r_c.dgn Date: 02-JUL-2013 11:15 User: dor2062 Computer: DRBRIDGE29

BILL OF BARS

PIER NO. 1 (SOUTHBOUND)

MARK	NO.	LENGTH	TYPE	"A"	"B"	"C"	"D"	"E"	"F"	PIN	HOOK	WEIGHT LB
P1001	112	18'-3"	104	15'-3"	3'-0"					1'-10"		
P1002	112	31'-0"	STR.									
P901	70	14'-0"	STR.									
P902	18	40'-0"	STR.									
P801	54	25'-0"	STR.									
P802	9	41'-6"	STR.									
P601	158	12'-6"	107	3'-0"	2'-7"					4½"	8"	
P602	20	7'-0"	STR.									
P501	128	8'-2"	103	2'-0"	4'-2"	2'-0"				2½"		
P502	52	14'-0"	STR.									
P503	6	25'-0"	STR.									
P504	25	42'-0"	108	9'-2"	2'-8"	9'-2"	3'-2"			2½"		
P505	32	23'-9"	STR.									
P506	32	6'-8"	103	2'-0"	2'-8"	2'-0"				2½"		
P507	50	21'-9"	STR.									
P508	8	29'-11 AVG.	STR.									
P509	60	6'-0"	103	2'-0"	2'-0"	2'-0"				2½"		
P510	26	8'-0"	103	3'-6"	1'-0"	3'-6"				2½"		
P511	MAX.	15'-4"	103	7'-2"	1'-0"	7'-2"				2½"		
	16	10'-8" AVG.										
	MIN.	6'-0"	103	2'-6"	1'-0"	2'-6"				2½"		
P512	MAX.	13'-0"	103	5'-6"	2'-0"	5'-6"				2½"		
	16	10'-2" AVG.										
	MIN.	7'-4"	103	2'-8"	2'-0"	2'-8"				2½"		
P513	4	41'-0	STR.									
P514	10	7'-11"	133	2'-6"	2'-11"	2'-6"	0'-10"			2½"		
P515	45	9'-4"	103	2'-10"	3'-8"	2'-10"				2½"		
P516	40	9'-3"	103	2'-10"	3'-7"	2'-10"				2½"		
P517	6	17'-5"	STR.									
P518	6	15'-6"	STR.									
P519	10	13'-8"	105	9'-8"	4'-0"	1'-5¾"				2½"		
P401	133	3'-5"	113		2'-8"					2"	4½"	
P402	115	2'-9"	113		2'-0"					2"	4½"	
P403	54	4'-3"	113		3'-6"					2"	4½"	

TOTAL = LB

BILL OF BARS

PIER NO. 1 (NORTHBOUND)

MARK	NO.	LENGTH	TYPE	"A"	"B"	"C"	"D"	"E"	"F"	PIN	HOOK	WEIGHT LB
P1001	112	18'-3"	104	15'-3"	3'-0"					1'-10"		8795
P1002	112	31'-0"	STR.									14940
P901	70	14'-0"	STR.									3332
P902	18	40'-0"	STR.									2448
P801	54	25'-0"	STR.									3605
P802	9	41'-6"	STR.									997
P601	158	12'-6"	107	3'-0"	2'-7"					4½"	8"	2966
P602	20	7'-0"	STR.									210
P501	128	8'-2"	103	2'-0"	4'-2"	2'-0"				2½"		1090
P502	52	14'-0"	STR.									759
P503	6	25'-0"	STR.									156
P504	25	42'-0"	108	9'-2"	2'-8"	9'-2"	3'-2"			2½"		1095
P505	32	23'-9"	STR.									793
P506	32	6'-8"	103	2'-0"	2'-8"	2'-0"				2½"		223
P507	50	21'-9"	STR.									1134
P508	8	29'-11 AVG.	STR.									250
P509	60	6'-0"	103	2'-0"	2'-0"	2'-0"				2½"		375
P510	26	8'-0"	103	3'-6"	1'-0"	3'-6"				2½"		217
P511	MAX.	15'-4"	103	7'-2"	1'-0"	7'-2"				2½"		178
	16	10'-8" AVG.										
	MIN.	6'-0"	103	2'-6"	1'-0"	2'-6"				2½"		
P512	MAX.	13'-0"	103	5'-6"	2'-0"	5'-6"				2½"		170
	16	10'-2" AVG.										
	MIN.	7'-4"	103	2'-8"	2'-0"	2'-8"				2½"		
P513	4	41'-0	STR.									171
P514	10	7'-11"	133	2'-6"	2'-11"	2'-6"	0'-10"			2½"		83
P515	45	9'-4"	103	2'-10"	3'-8"	2'-10"				2½"		438
P516	40	9'-3"	103	2'-10"	3'-7"	2'-10"				2½"		386
P517	6	17'-5"	STR.									109
P518	6	15'-6"	STR.									97
P519	10	13'-8"	105	9'-8"	4'-0"	1'-5¾"				2½"		143
P401	133	3'-5"	113		2'-8"					2"	4½"	304
P402	115	2'-9"	113		2'-0"					2"	4½"	211
P403	54	4'-3"	113		3'-6"					2"	4½"	153

TOTAL = 45828 LB

PRELIMINARY

PROJECT NUMBER	SHEET NO.
10-2(116)	

C.N. 42103B

STRUCTURE NUMBER S010 05443 L&R

BAR SETS (SOUTHBOUND)

MARK	MAX. LENGTH	MIN. LENGTH	NO. OF SETS	BARS PER SET
P508	37'-5"	22'-5"	2	4
P511	15'-4"	6'-0"	2	8
P512	13'-0"	7'-4"	2	8

BAR SETS (NORTHBOUND)

MARK	MAX. LENGTH	MIN. LENGTH	NO. OF SETS	BARS PER SET
P508	37'-5"	22'-5"	2	4
P511	15'-4"	6'-0"	2	8
P512	13'-0"	7'-4"	2	8

THE NUMBER OF LAP SPLICES ARE CALCULATED BASED ON 60'-0" LENGTHS OF REINFORCING STEEL BARS. SPLICES ON BARS SHORTER THAN 60'-0" WILL REQUIRE ADDITIONAL LAP SPLICES AT NO ADDITIONAL EXPENSE TO NDOR.

NOTE:
FOR BENDING DIAGRAMS, HOOK LENGTHS, & PIN DIAMETERS SEE SHEET 42 OF 48.

PROFESSIONAL CIVIL ENGINEER MARK J. TRAYNOWICZ E-8119 STATE OF NEBRASKA

BRIDGE ENGINEER

332'-0" 2-SPAN PRESTRESSED (NU1800) GIRDER BRIDGE

PIER BILL OF BARS

COUNTY BUFFALO
HWY. NO. N-10
REF. POST.
STA. 148+18.22

LOCATION KEARNEY EAST BYPASS
SKEW 14° LHB (11th ST. TO 56th ST.)
ROADWAY 39'-0"
DESIGN LIVE LOAD HL-93

DESIGNED BY SS
DETAILED BY MR
CHECKED BY MJA
DATE APRIL 2013

STATE OF NEBRASKA - DEPARTMENT OF ROADS - BRIDGE DIVISION

NDOR Nebraska Department of Roads

PROFESSIONAL STRUCTURAL ENGINEER M.J. STEVE SABRA E-8112 STATE OF NEBRASKA

SPECIAL PLAN NO. 1

File: s010 05443l&r_c.dgn Date: 02-JUL-2013 11:16 User: dor2062 Computer: DRBRIDGE29

PRELIMINARY

PROJECT NUMBER	SHEET NO.
10-2(116)	

C.N. 42103B

STRUCTURE NUMBER S010 05443 L&R

BRIDGE ENGINEER

NU 1800 GIRDER DESIGN -- CAST IN PLACE DECK (SOUTHBOUND BRIDGE) / NON-COMPOSITE PROPERTIES / ■ AVG. COMPOSITE PROPERTIES

SPAN NO.	GIRDER CASTING LENGTH (Ft)	CONCRETE STRENGTH (PSI) AT RELEASE	CONCRETE STRENGTH (PSI) AT 28 DAYS	NO. OF STRANDS PER GIRDER	STRANDS PER ROW AT MIDSPAN R1	R2	R3	R4	R5	R6	R7	NUMBER of DEFLECTED STRANDS	STRAND CENTROID ENDS YE (in)	STRAND CENTROID MIDSPAN YM (in)	STRAND DEFLECTION AT ENDS YD (in)	DISTANCE BETWEEN HOLDDOWN PNTS. X	BLOCK OUT DIMENSIONS Abut. B1	BLOCK OUT DIMENSIONS Piers B2	GIRDER MASS (Lbs/Ft)	GIRDER AREA (in²)	GIRDER CENTROID YNC (in)	MOMENT of INERTIA (in⁴)	MIDSPAN CAMBER (in) AT RELEASE	MIDSPAN CAMBER (in) AT 30 DAYS	■ AVG. DEFLECTION FOR SHIMS (Due to Slab & Rail) (in) Span Tenth Points (Sym.) .1	.2	.3	.4	.5	SLAB 28 DAY Strength (psi)	SLAB Design DEPTH (in)	Midspan Transformed Concrete Section: SLAB Eff. WIDTH (n x be) (in)	SECTION AREA (in²)	SECTION CENTROID YC (in)	MOMENT of INERTIA (in⁴)	▲ SUPER-IMPOSED DEAD LOADS (plf)
1 & 2	166'-2"	7200	10000	60	18	18	12	6	2	2	2	10	14.11	4.92	61.02	34'-0"	1'-10½"	1'-6¾"	894.5	858.70	32.06	612674.0	4.40	7.68	1.70	2.11	2.77	3.17	3.30	4000	7	63.25	1301	46.46	1137581	210

■ Averages shown are for exterior and Interior girders.

◪ DEBONDED STRAND

Columns Sym. about ℄ Girder

LOCATION ROW	LOCATION COLUMN	DEBONDING LENGTH
1	8 , 4	16'-0"
1	6	12'-0"
2	7 , 3	10'-0"
2	5	8'-0"
3	1	6'-0"

◪ Both Northbound and Southbound

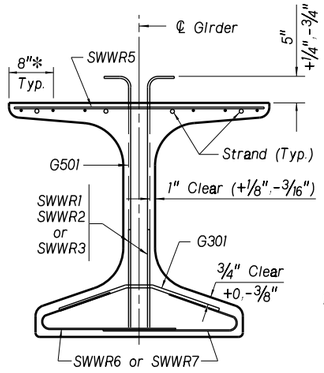

REINFORCING

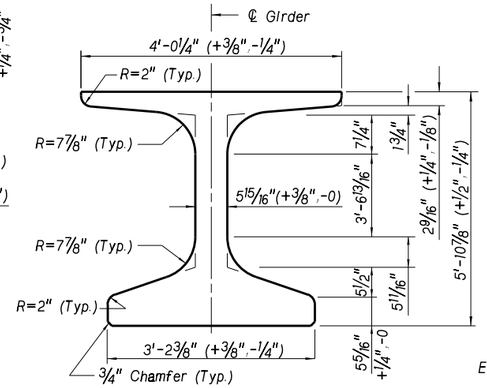

DIMENSIONS

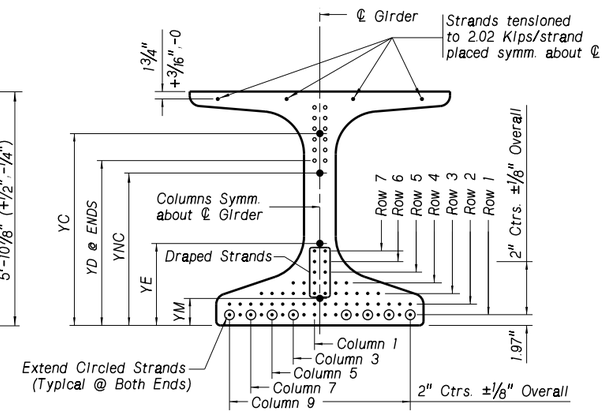

STRAND SPACINGS AND TOLERANCES

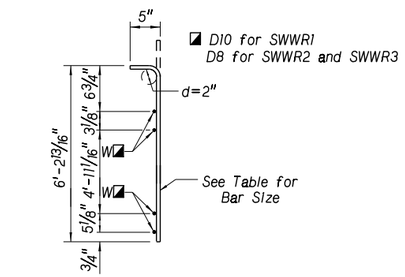

SWWR1, SWWR2 & SWWR3

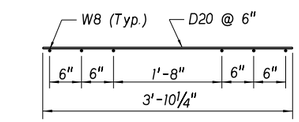

SWWR5

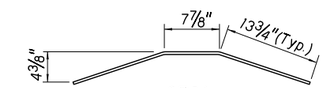

G301

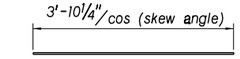

G401

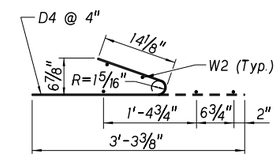

SWWR7

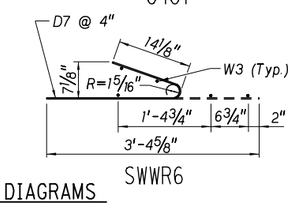

SWWR6

BENDING DIAGRAMS

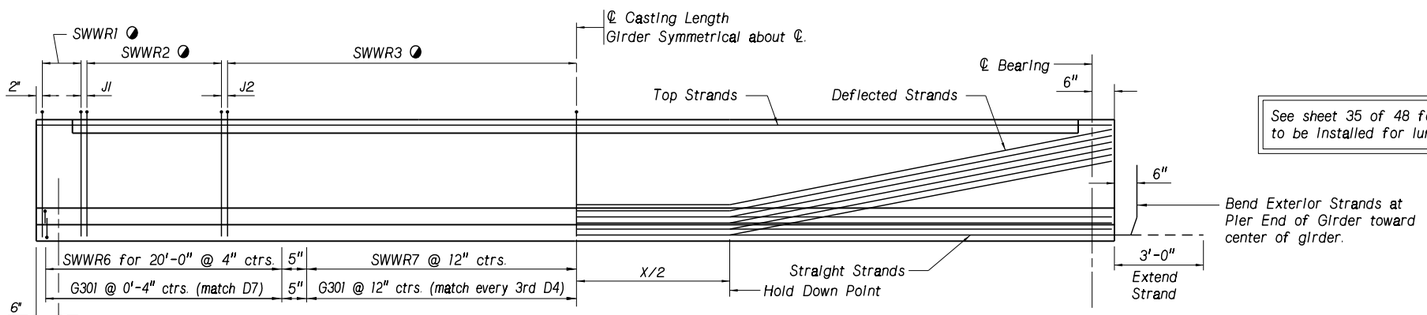

GIRDER ELEVATION

See sheet 35 of 48 for locations of plates to be installed for luminaires.

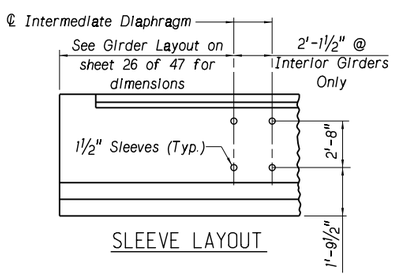

SLEEVE LAYOUT

◪ STEEL WELDED WIRE REINFORCEMENT (SWWR5, SWWR6, & SWWR7 as shown in Bending Diagrams)

SPAN NO.	SWWR1 BAR SIZE	S1	L1	J1	SWWR2 BAR SIZE	S2	L2	J2	SWWR3 BAR SIZE	S3	L3
1 & 2	D24	2"	4'-2"	5"	D18	5"	14'-7"	5"	D18	10"	63'-4"

S = Vertical wire spacing
L = Length of SWWR mats
J = Distance Between SWWR mats

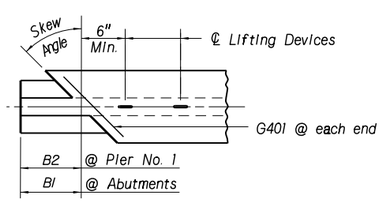

TOP FLANGE BLOCK OUT DETAIL

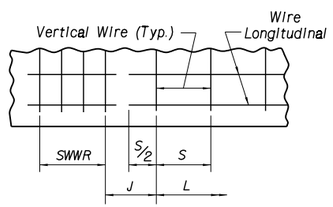

FABRIC PLACEMENT DETAIL

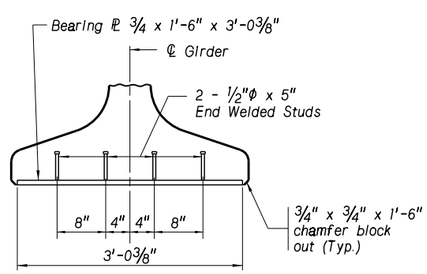

END VIEW

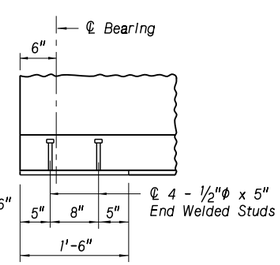

SIDE VIEW

BEARING PLATE

PRESTRESSED GIRDER NOTES:

FABRICATOR shall be responsible for exercising extreme care in lifting, handling, storing and transporting of the prestressed girders to prevent cracking or damage. Girders shall be maintained in an upright position and supported near the ends at all times. Proper support bearings shall be used to avoid twisting of the girders. Girders shall be lifted by devices designed by the fabricator.

PRESTRESSING STRAND shall be uncoated, seven-wire, low-relaxation steel strand of 0.6" nominal diameter, and shall conform to the requirements of ASTM A416, Grade 270. Strands shall be tensioned to 43.94 Kips before release, unless specified otherwise. All methods and procedures employed in tensioning the strands shall be subject to the Engineer's approval. The method chosen shall be executed in a manner to assure that both ends of all strands in the girder are uniformly tensioned. The prestressed strand shall be released in a manner that will minimize eccentricity.

CONCRETE for the girders shall have the strength at release and at 28 days (design strength) as shown in the data table. No bond stress shall be transferred to the concrete nor the end anchorage released until the concrete has attained the specified strength. All exposed edges of girders, except at top and ends, shall be chamfered ¾".

* GIRDER TOP FLANGE shall be steel troweled to a smooth finish for 8" at the edges, as shown. Bond breaker shall be applied to this region only. The center portion shall be rough finished by scarifying the surface transversely with a wire brush, and no laitance shall remain on the surface. Bond breaker shall be Sil-Act40, manufactured by Act Corporation or Stifel, manufactured by Nox-Crete.

REINFORCING STEEL shall conform to the requirements of ASTM designation A615/A615M, Grade 60. Steel Welded Wire Reinforcement, deformed, for concrete shall conform to ASTM A497 or AASHTO M221M/M221 with a minimum yield strength of 70 ksi., with corresponding strains less than a maximum of 0.35%.

BEARING PLATES shall conform to the requirements of ASTM A709/A709M, Grade 36 or Grade 50W weathering steel. The Grade 36 steel shall be galvanized according to the requirements of ASTM A123/A123M.

DIMENSIONAL TOLERANCES shall be in accordance with the Prestressed Concrete Institute Manual for Quality Control, MNL-116-99, 4th Edition.

▲ For rating purpose only, superimposed dead loads do not include future wearing surface.

332'-0" 2-SPAN PRESTRESSED (NU1800) GIRDER BRIDGE
GIRDER DATA (SOUTHBOUND BRIDGE)

COUNTY BUFFALO
HWY. NO. N-10
REF. POST. 54.43
STA. 148+18.22
LOCATION KEARNEY EAST BYPASS (11th ST. TO 56th ST.)
SKEW 14° LHB
ROADWAY 39'-0"
DESIGN LIVE LOAD HL-93
DATE APRIL 2013
DESIGNED BY SS
DETAILED BY MR
CHECKED BY MJA

STATE OF NEBRASKA - DEPARTMENT OF ROADS - BRIDGE DIVISION

NDOR Nebraska Department of Road.

SPECIAL PLAN NO. 1

24 / 48

Computer: DRBRIDGE29 User: dor2062 Date: 02-JUL-2013 11:21 File: c010 05443l&r_d.dgn

NU 1800 GIRDER DESIGN -- NU CONCRETE DECK PANEL DECK (NORTHBOUND BRIDGE)																	NON-COMPOSITE PROPERTIES						■ AVG. COMPOSITE PROPERTIES							
																									Midspan Transformed Concrete Section					▲
SPAN NO.	GIRDER CASTING LENGTH (Ft)	CONCRETE STRENGTH (PSI)		NO. OF STRANDS PER GIRDER	STRANDS PER ROW AT MIDSPAN							NUMBER of DEFLECTED STRANDS	STRAND CENTROID		STRAND DEFLECTION AT ENDS YD (in)	DISTANCE BETWEEN HOLDDOWN PNTS. X	BLOCK OUT DIMENSIONS		GIRDER MASS (Lbs/Ft)	GIRDER AREA (in^2)	GIRDER CENTROID YNC (in)	MOMENT of INERTIA (in^4)	MIDSPAN CAMBER (in)		■ AVG. DEFLECTION FOR SHIMS (Due to Slab & Rail) (in)					SLAB 28 DAY Strength (psi)	SLAB Design DEPTH (in)	SLAB Eff. WIDTH (n x b_e) (in)	SECTION AREA (in^2)	SECTION CENTROID YC (in)	MOMENT of INERTIA (in^4)	SUPER-IMPOSED DEAD LOADS (plf)
		AT RELEASE	AT 28 DAYS		R1	R2	R3	R4	R5	R6	R7		ENDS YE (in)	MIDSPAN YM (in)			Abut. B1	Piers B2					AT RELEASE	AT 30 DAYS	Span Tenth Points (Sym.) .1	.2	.3	.4	.5							
1 & 2	166'-2"	7200	10300	60	18	18	12	6	2	2	2	10	12.83	4.92	53.00	34'-0"	---	---	894.5	858.70	32.06	612674.0	4.40	7.68	1.27	2.25	2.96	3.38	3.50	6000	7.5	77.45	1440	49.24	1243263	210

■ Averages shown are for exterior and interior girders.

PRELIMINARY

◪ DEBONDED STRAND

Columns Sym. about ℄ Girder		
LOCATION		DEBONDING LENGTH
ROW	COLUMN	
1	8 , 4	16'-0"
1	6	12'-0"
2	7 , 3	10'-0"
2	5	8'-0"
3	1	6'-0"

◪ Both Northbound and Southbound

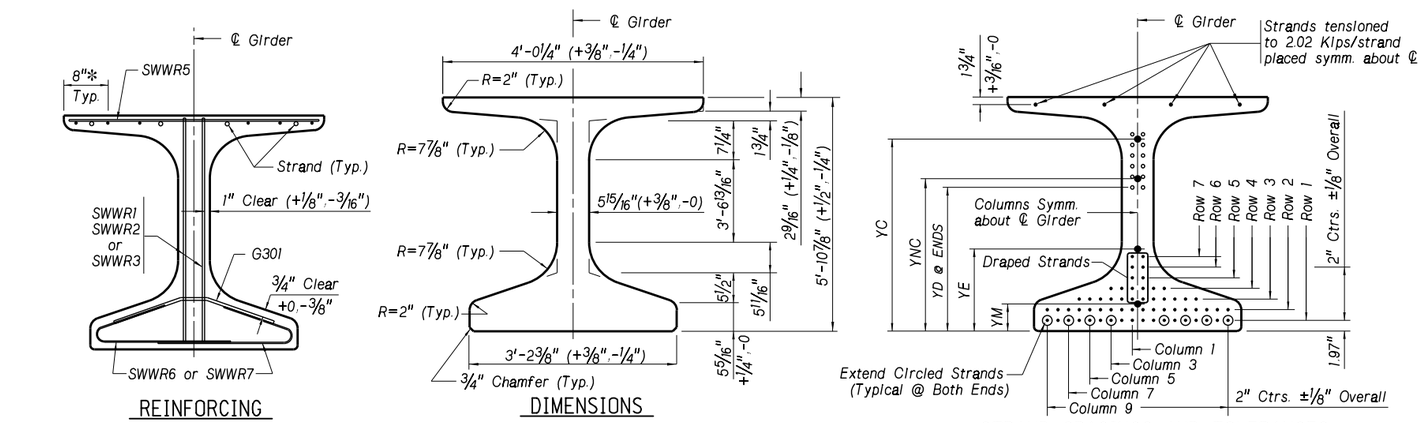

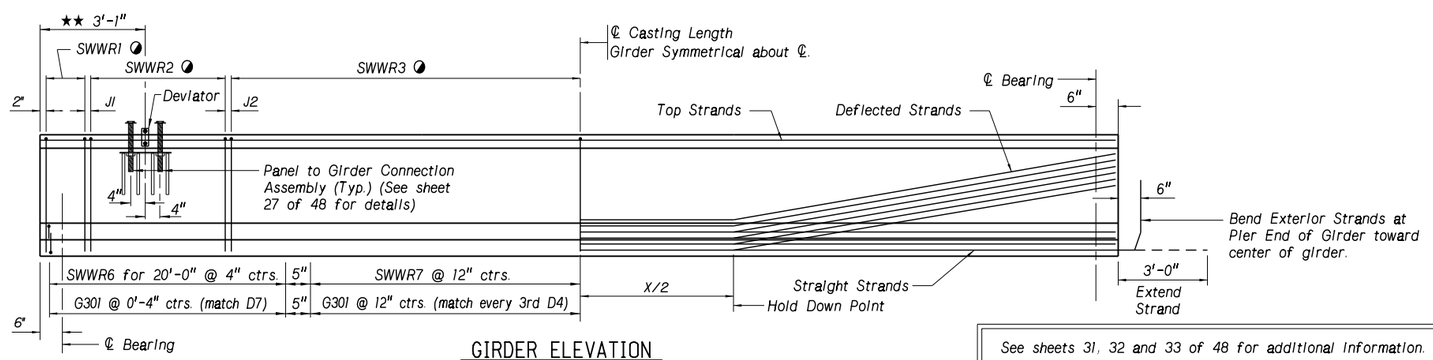

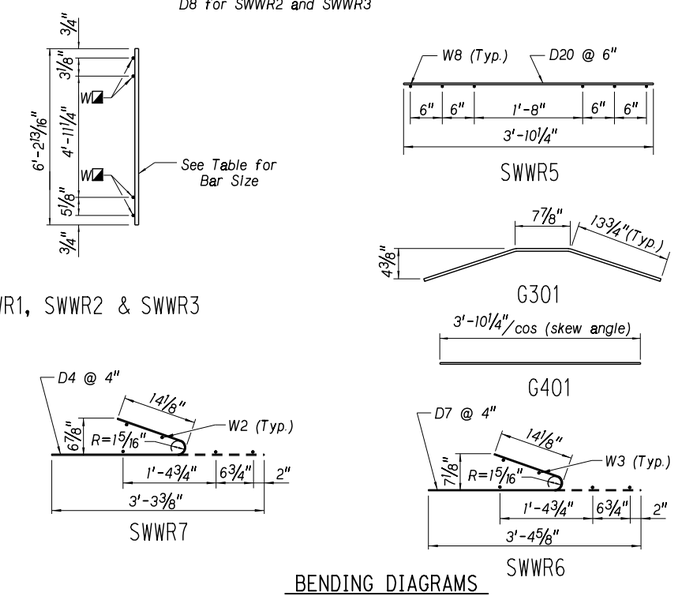

PRESTRESSED GIRDER NOTES:

FABRICATOR shall be responsible for exercising extreme care in lifting, handling, storing and transporting of the prestressed girders to prevent cracking or damage. Girders shall be maintained in an upright position and supported near the ends at all times. Girder lifting points shall be placed between the panel-to-girder connection assemblies and should be cut prior to panel erection. Proper support bearings shall be used to avoid twisting of the girders. Girders shall be lifted by devices designed by the fabricator.

PRESTRESSING STRAND shall be uncoated, seven-wire, low-relaxation steel strand of 0.6" nominal diameter, and shall conform to the requirements of ASTM A416, Grade 270. Strands shall be tensioned to 43.94 Kips before release, unless specified otherwise. All methods and procedures employed in tensioning the strands shall be subject to the Engineer's approval. The method chosen shall be executed in a manner to assure that both ends of all strands in the girder are uniformly tensioned. The prestressed strand shall be released in a manner that will minimize eccentricity.

CONCRETE for the girders shall have the strength at release and at 28 days (design strength) as shown in the data table. No bond stress shall be transferred to the concrete nor the end anchorage released until the concrete has attained the specified strength. All exposed edges of girders, except at top and ends, shall be chamfered 3/4".

✻ GIRDER TOP FLANGE shall be steel troweled to a smooth finish for 8" at the edges, as shown. Bond breaker shall be applied to this region only. The center portion shall be rough finished by scarifying the surface transversely with a wire brush, and no laitance shall remain on the surface. Bond breaker shall be SII-Act40, manufactured by Act Corporation or Stifel, manufactured by Nox-Crete.

REINFORCING STEEL shall conform to the requirements of ASTM designation A615/A615M, Grade 60. Steel Welded Wire Reinforcement, deformed, for concrete shall conform to ASTM A497 or AASHTO M221M/M221 with a minimum yield strength of 70 ksi., with corresponding strains less than a maximum of 0.35%.

BEARING PLATES shall conform to the requirements of ASTM A709/A709M, Grade 36 or Grade 50W weathering steel. The Grade 36 steel shall be galvanized according to the requirements of ASTM A123/A123M.

DIMENSIONAL TOLERANCES shall be in accordance with the Prestressed Concrete Institute Manual for Quality Control, MNL-116-99, 4th Edition.

▲ For rating purpose only, superimposed dead loads do not include future wearing surface.

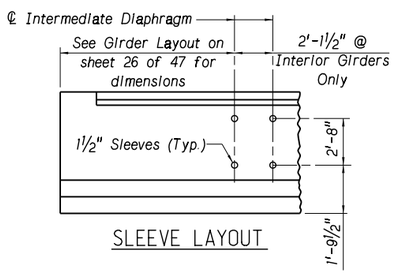

◑ STEEL WELDED WIRE REINFORCEMENT (SWWR5, SWWR6, & SWWR7 as shown in Bending Diagrams)

SPAN NO.	SWWR1				SWWR2				SWWR3		
	BAR SIZE	S1	L1	J1	BAR SIZE	S2	L2	J2	BAR SIZE	S3	L3
1 & 2	D24	2"	4'-2"	5"	D18	5"	14'-7"	5"	D18	10"	63'-4"

S = Vertical wire spacing
L = Length of SWWR mats
J = Distance Between SWWR mats

See sheets 31, 32 and 33 of 48 for additional information.

See Girder Elevation on sheet 27 of 48 for panel to girder connection and deviator locations along the girder.

The portion of the threaded rods embedded in the girders shall be properly greased to allow cranking the threaded rods up where needed.

The Panel to Girder Connection and the Deviator shall be considered subsidiary to the pay item, "PRECAST/PRESTRESSED CONCRETE SUPERSTRUCTURE AT STATION 148+18.22".

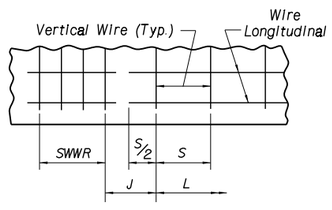

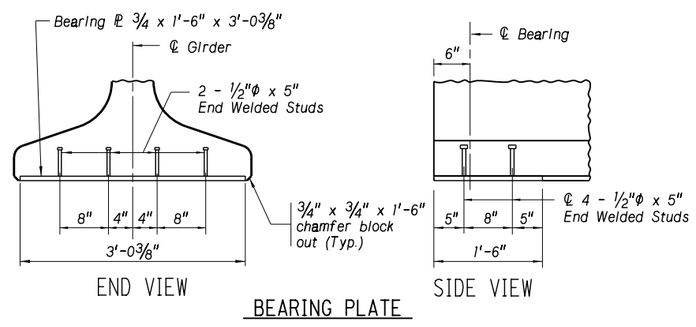

PROJECT NUMBER 10-2(116) | SHEET NO.

C.N. 42103B

STRUCTURE NUMBER S010 05443 L&R

BRIDGE ENGINEER

PROFESSIONAL CIVIL ENGINEER MARK J. TRAYNOWICZ E-8119 STATE OF NEBRASKA

332'-0" 2-SPAN PRESTRESSED (NU1800) GIRDER BRIDGE
GIRDER DATA (NORTHBOUND BRIDGE)

COUNTY BUFFALO | LOCATION KEARNEY EAST BYPASS
HWY. NO. N-10 | SKEW 14° LHB | (11th ST. TO 56th ST.)
REF. POST. 54.43 | ROADWAY 39'-0" | DESIGN LIVE LOAD HL-93
STA. 148+18.22
DESIGNED BY SS | DETAILED BY MR | CHECKED BY MJA | DATE APRIL 2013

STATE OF NEBRASKA - DEPARTMENT OF ROADS - BRIDGE DIVISION

NDOR Nebraska Department of Roads

PROFESSIONAL STRUCTURAL ENGINEER M.J. STEVE SABRA E-8112 STATE OF NEBRASKA

SPECIAL PLAN NO. 1 | 25 / 48

Computer: DRBRIDGE29 User: dor2062 Date: 13-AUG-2013 14:08 File: c010 05443\&r_d.dgn

PRELIMINARY

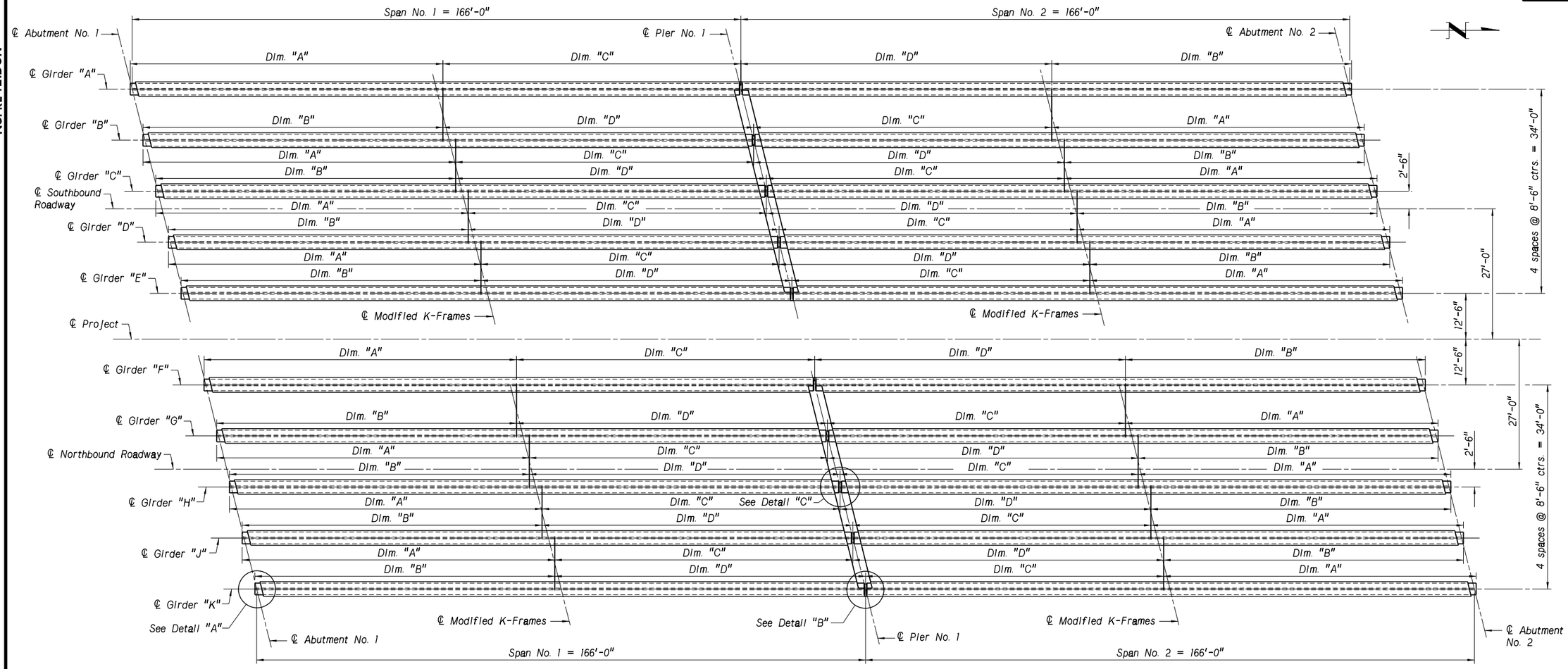

GIRDER LAYOUT
Not to Scale

See sheet 30 of 48 for Modified K-Frame detail.

Dimensions Along Girder to 1½" Φ Sleeves	
	Length
Dim. "A"	84'-6⅝"
Dim. "B"	82'-5⅜"
Dim. "C"	81'-7⅜"
Dim. "D"	83'-8⅝"

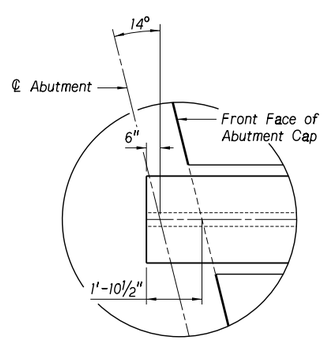

DETAIL "A"
Abutment No. 1 Shown, Abutment No. 2 Opposite
Not to Scale

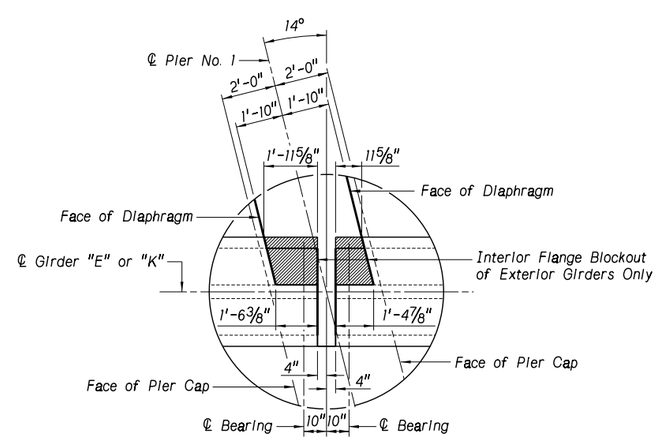

DETAIL "B"
Girders "E" and "K" Shown, Girders "A" and "F" Opposite
Not to Scale

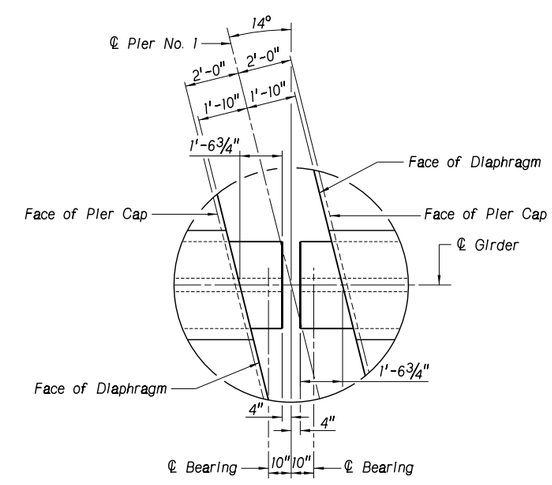

DETAIL "C"
Typical All Interior Girders
Not to Scale

PROJECT NUMBER	SHEET NO.
10-2(116)	

C.N. 42103B

STRUCTURE NUMBER
S010 05443 L&R

PROFESSIONAL CIVIL ENGINEER MARK J. TRAYNOWICZ E-8119 STATE OF NEBRASKA

BRIDGE ENGINEER

332'-0" 2-SPAN PRESTRESSED (NU1800) GIRDER BRIDGE
GIRDER LAYOUT

COUNTY BUFFALO
HWY. NO. N-10
REF. POST. 54.43
STA. 148+18.22

LOCATION KEARNEY EAST BYPASS (11th ST. TO 56th ST.)
SKEW 14° LHB
ROADWAY 39'-0"
DESIGN LIVE LOAD HL-93

DATE APRIL 2013
DESIGNED BY SS
DETAILED BY MR
CHECKED BY MJA

STATE OF NEBRASKA - DEPARTMENT OF ROADS - BRIDGE DIVISION

NDOR Nebraska Department of Roads

PROFESSIONAL STRUCTURAL ENGINEER M.J. STEVE SABRA E-8112 STATE OF NEBRASKA

SPECIAL PLAN NO. 1

NUPRE 12.DGN
Computer: DRBRIDGE29
User: dor2062
Date: 02-JUL-2013 11:22
File: c010 05443l&r_d.dgn

PRELIMINARY

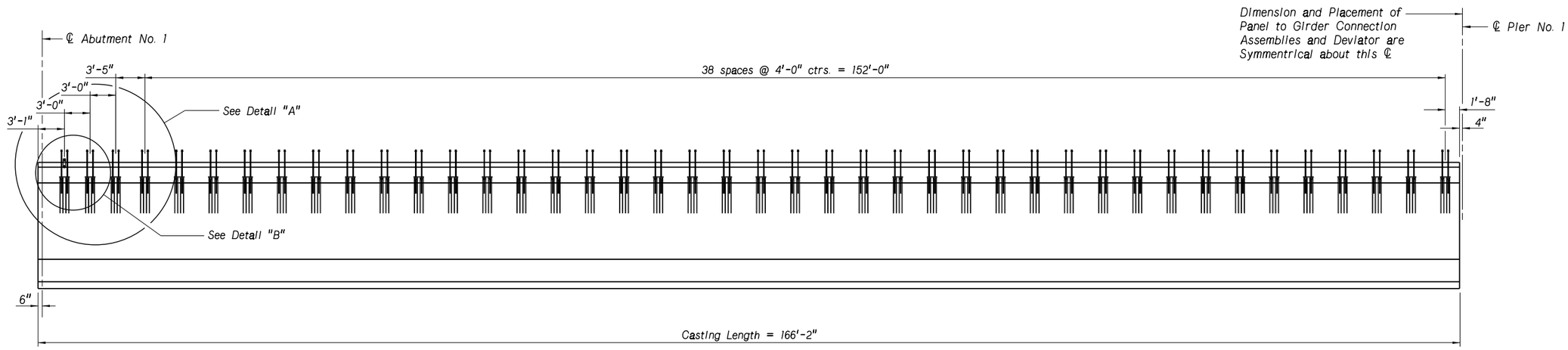

GIRDER ELEVATION
Girders F, G, H, J, and K Only
Northbound Bridge

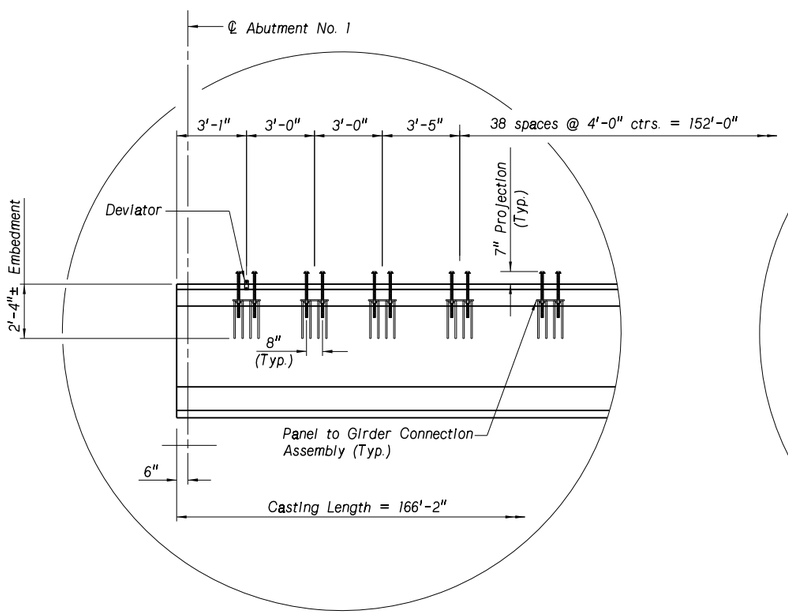

DETAIL "A"
Girders F, G, H, J, and K Only
Northbound Bridge

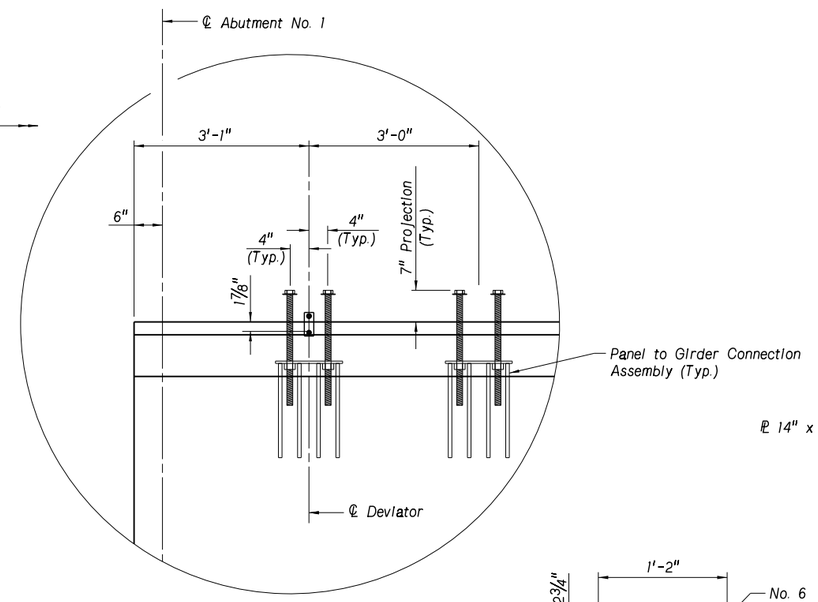

DETAIL "B"
Girders F, G, H, J, and K Only
Northbound Bridge

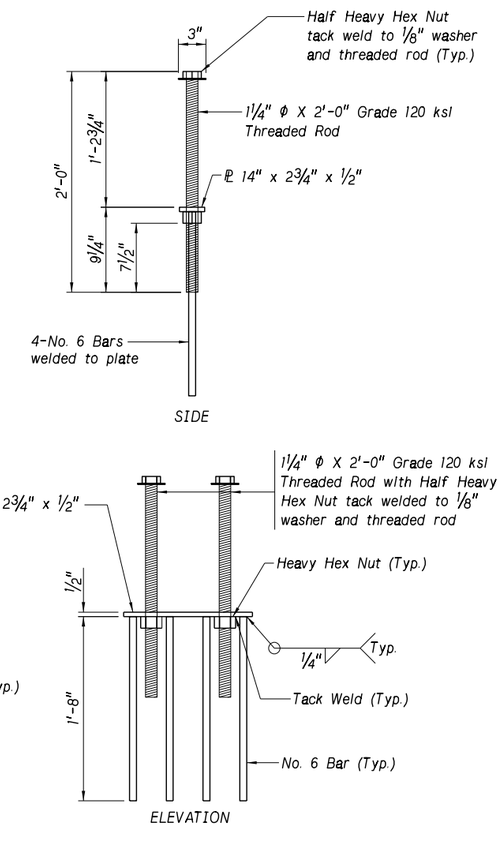

PANEL TO GIRDER CONNECTION ASSEMBLY DETAIL
To be Installed on Girders F, G, H, J, and K Only
Northbound Bridge

The portion of the threaded rods embedded in the girders shall be properly greased to allow cranking the threaded rods up where needed.

The Panel to Girder Connection and the Deviator shall be considered subsidiary to the pay item, "PRECAST/PRESTRESSED CONCRETE SUPERSTRUCTURE AT STATION 148+18.22".

See sheet 32 of 48 for deviator details.

PROJECT NUMBER	SHEET NO.
10-2(116)	

C.N. 42103B

STRUCTURE NUMBER
S010 05443 L&R

PROFESSIONAL CIVIL ENGINEER MARK J. TRAYNOWICZ E-8119 STATE OF NEBRASKA

BRIDGE ENGINEER

332'-0" 2-SPAN PRESTRESSED (NU1800) GIRDER BRIDGE
GIRDER ELEVATION

COUNTY BUFFALO
HWY. NO. N-10
REF. POST. 54.43
STA. 148+18.22
LOCATION KEARNEY EAST BYPASS (11th ST. TO 56th ST.)
SKEW 14° LHB
ROADWAY 39'-0"
DESIGN LIVE LOAD HL-93
DATE APRIL 2013
DESIGNED BY NDOR
DETAILED BY MR
CHECKED BY FJ

STATE OF NEBRASKA - DEPARTMENT OF ROADS - BRIDGE DIVISION

NDOR Nebraska Department of Roads

PROFESSIONAL CIVIL ENGINEER FOUAD AH JABER E-8111 STATE OF NEBRASKA

SPECIAL PLAN NO. 1

File: c010 05443l&r_d.dgn Date: 13-AUG-2013 14:09 User: dor2062 Computer: DRBRIDGE29

PRELIMINARY

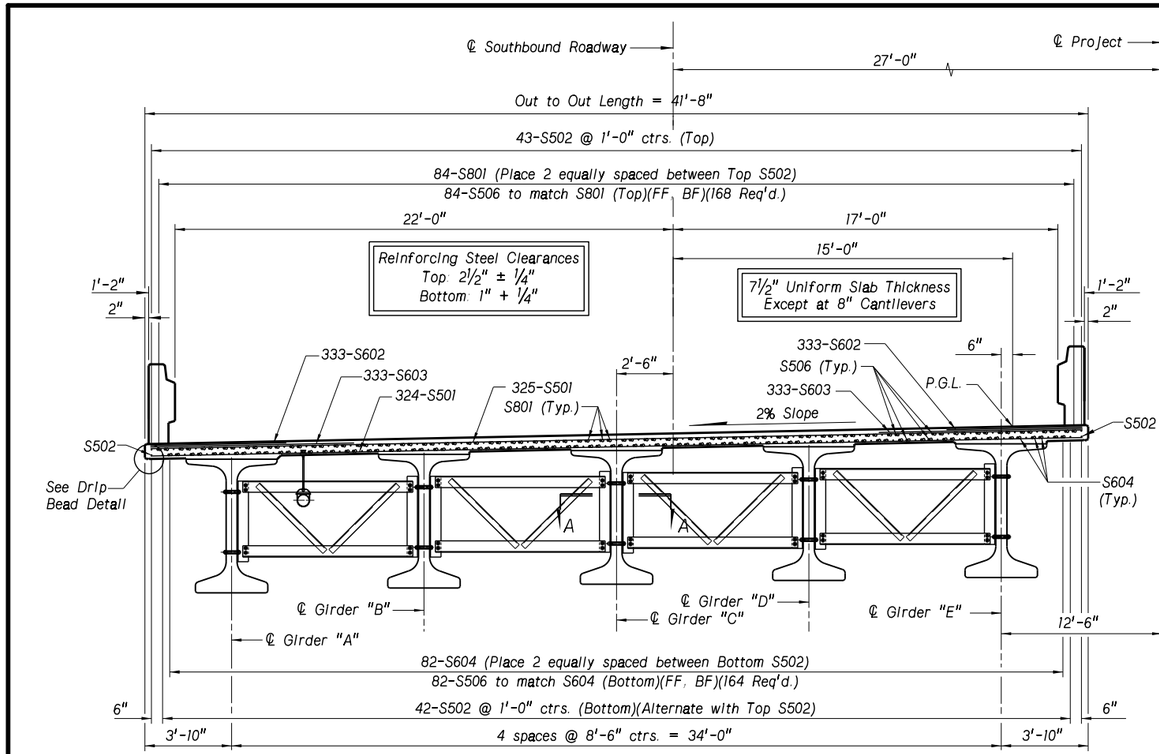

CAST-IN-PLACE CONCRETE DECK CONSTRUCTION

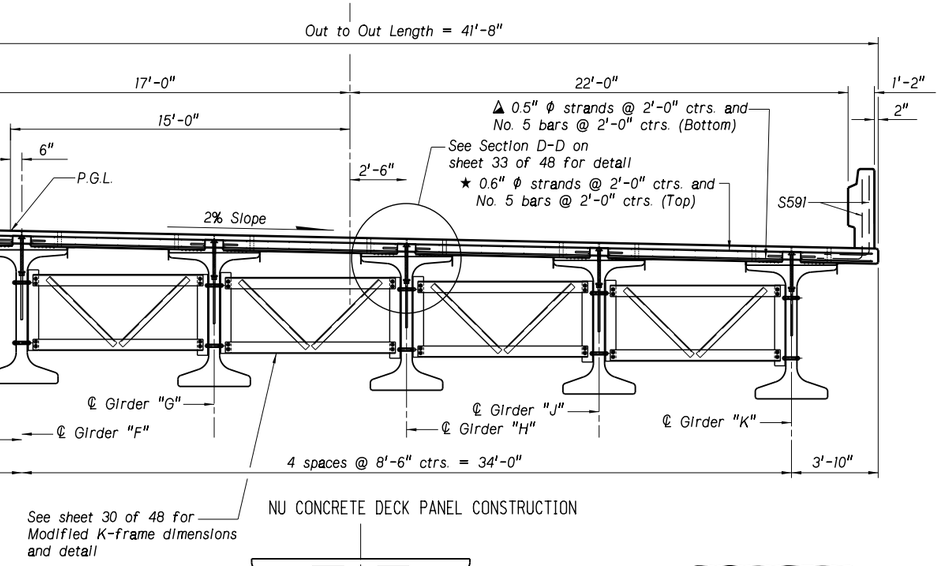

NU CONCRETE DECK PANEL CONSTRUCTION

FF: Front Face
BF: Back Face

P.G.L.: Profile Grade Line

See Slab Reinforcement For Cast-In-Place Deck on sheet 38 of 48 for reinforcment layout diagrams.

See Details "A" and "B" on sheet 39 of 48 for additional slab reinforcment layout diagrams.

See sheets 40 and 44 of 48 for placement of rail reinforcment.

▲ 0.5" ϕ Strands are tensioned at 30.98 kips/strand.

★ 0.6" ϕ Strands are tensioned at 43.94 kips/strand.

See sheet 31 of 48 for deck panel plan and notes.

See sheet 42 of 48 for Slab and Rail on Bridge Bill of Bars.

CROSS-SECTION OF ROADWAY

Modified K-Frames at Mid-Span Shown
See Girder Layout on sheet 26 of 48 for locations
Not to Scale

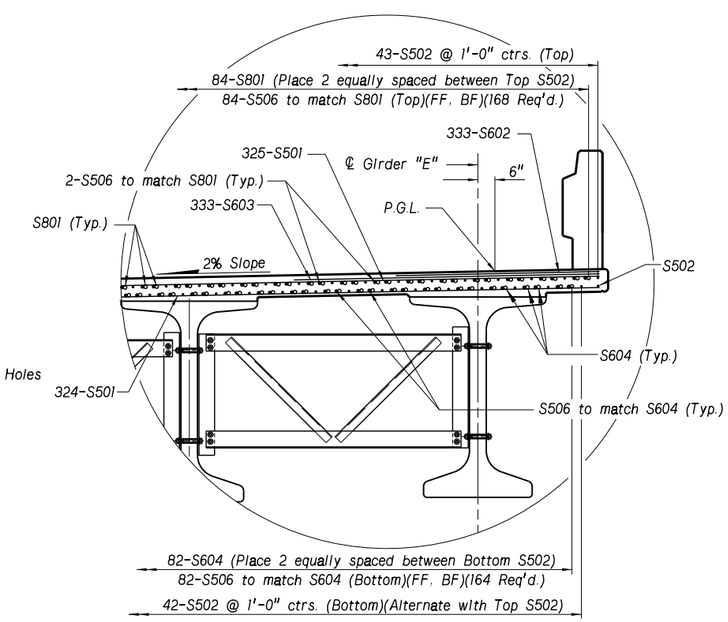

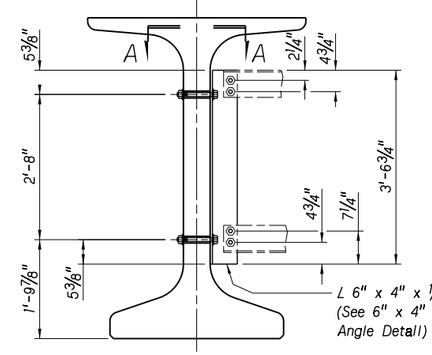

SECTION OF GIRDER AT INTERMEDIATE DIAPHRAGM

Exterior Girder Shown
See Section A-A for Interior Girders
Not to Scale

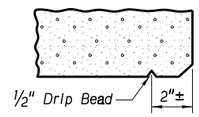

DRIP BEAD DETAIL

Not to Scale

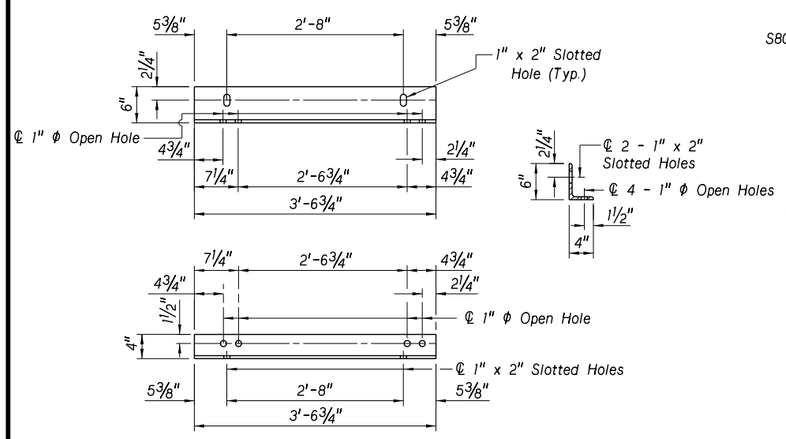

6" x 4" x ½" x 3'-6¾" ANGLE

Not to Scale

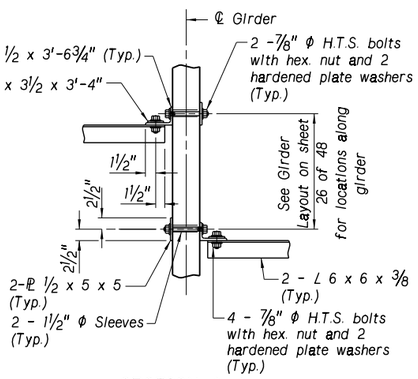

SECTION A-A

Typical All Interior Girders
Not to Scale

PROJECT NUMBER	SHEET NO.
10-2(116)	

C.N. 42103B

STRUCTURE NUMBER S010 05443 L&R

PROFESSIONAL CIVIL ENGINEER MARK J. TRAYNOWICZ E-8119 STATE OF NEBRASKA

BRIDGE ENGINEER

TWO 166'-0" SPANS CONCRETE (NU1800) GIRDER BRIDGE
CROSS-SECTION OF ROADWAY
AT MID-SPAN

DATE APRIL 2013

BY MJA

CHECKED BY MJA

DETAILED BY MR

DESIGNED BY SS

LOCATION KEARNEY EAST BYPASS
SKEW 14° LHB (11th ST. TO 56th ST.)
ROADWAY 39'-0"
DESIGN LIVE LOAD HL-93

COUNTY BUFFALO
HWY. NO. N-10
REF. POST. 54.43
STA. 148+18.22

STATE OF NEBRASKA - DEPARTMENT OF ROADS - BRIDGE DIVISION

NDOR Nebraska Department of Roads

PROFESSIONAL STRUCTURAL ENGINEER M.J. STEVE SABRA E-8112 STATE OF NEBRASKA

SPECIAL PLAN NO. 1

28 / 48

Computer: DRBRIDGE29 User: dor2062 Date: 09-JUL-2013 10:05 File: c010 05443&r_d.dgn

PRELIMINARY

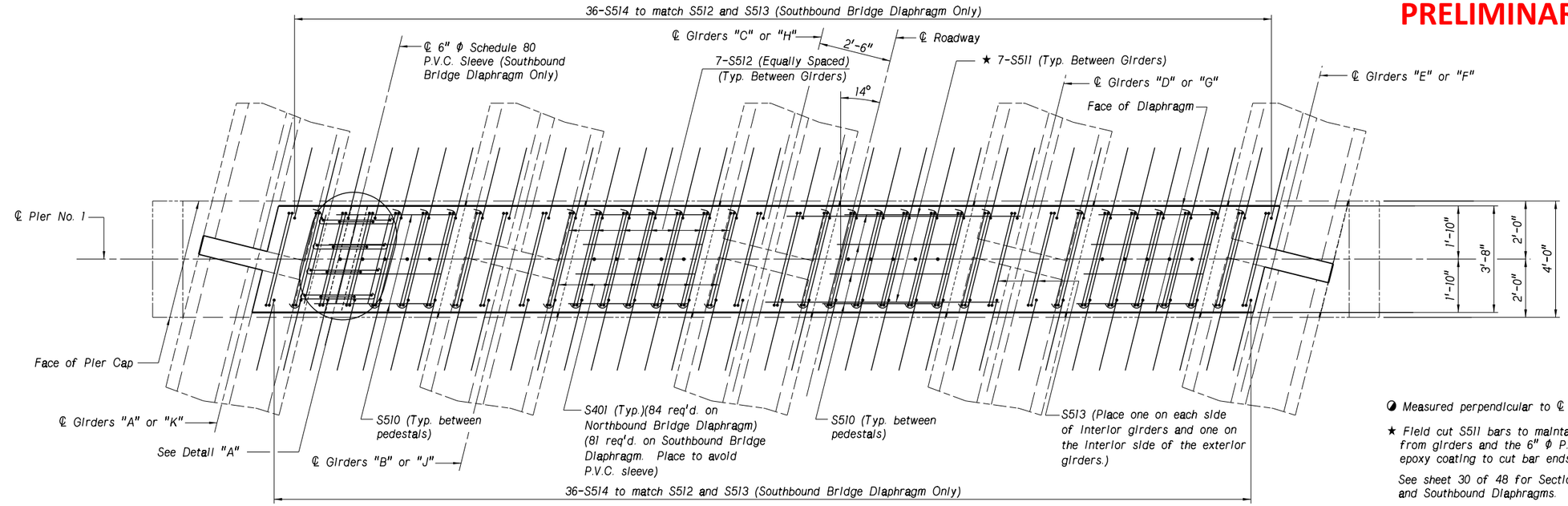

PLAN VIEW OF DIAPHRAGM

Southbound Bridge Diaphragm Shown, Northbound Bridge Diaphragm Opposite
Not to Scale

◑ Measured perpendicular to ℄ Roadway

★ Field cut S511 bars to maintain 2" clearance from girders and the 6" ϕ P.V.C. sleeve. Apply epoxy coating to cut bar ends.

See sheet 30 of 48 for Sections of Northbound and Southbound Diaphragms.

FF: Front Face
BF: Back Face

See sheet 42 of 48 for Slab and Rail on Bridge Bill of Bars.

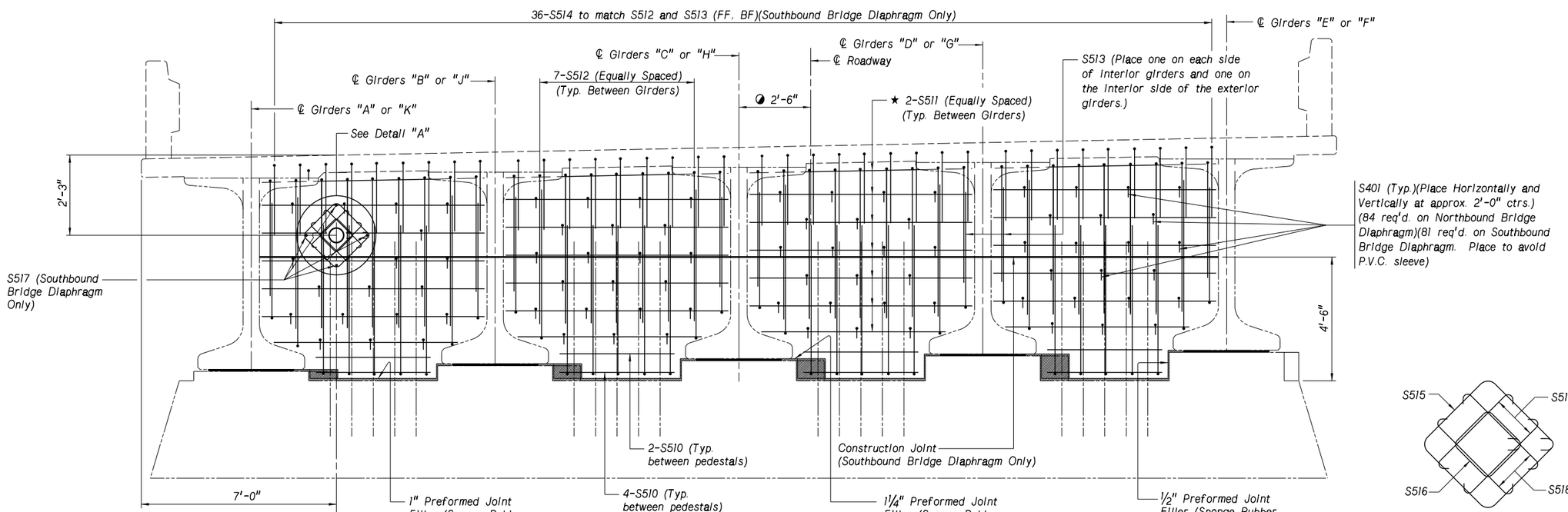

ELEVATION VIEW OF DIAPHRAGM

Southbound Bridge Diaphragm Shown, Northbound Bridge Diaphragm Opposite
Not to Scale

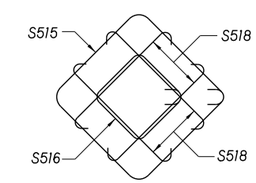

DETAIL "A"

4 Sets Required
(Southbound Bridge Only)
See Section of Southbound Diaphragm on sheet 30 of 48 for placement of assembly

PROJECT NUMBER	SHEET NO.
10-2(116)	

C.N. 42103B

STRUCTURE NUMBER S010 05443 L&R

PROFESSIONAL CIVIL ENGINEER MARK J. TRAYNOWICZ E-8119 STATE OF NEBRASKA

BRIDGE ENGINEER

332'-0" 2-SPAN PRESTRESSED (NU1800) GIRDER BRIDGE

DIAPHRAGM DETAILS

LOCATION KEARNEY EAST BYPASS (11th ST. TO 56th ST.)
SKEW 14° LHB
ROADWAY 39'-0"
DESIGN LIVE LOAD HL-93
DATE APRIL 2013
DETAILED BY MR
CHECKED BY MJA
BY MJA

COUNTY BUFFALO
HWY. NO. N-10
REF. POST. 54.43
STA. 148+18.22
DESIGNED BY SS

STATE OF NEBRASKA - DEPARTMENT OF ROADS - BRIDGE DIVISION

NDOR Nebraska Department of Roads

PROFESSIONAL STRUCTURAL ENGINEER M.J. STEVE SABRA E-8112 STATE OF NEBRASKA

SPECIAL PLAN NO. 1

File: s010 05443l&r_d.dgn Date: 02-JUL-2013 11:26 User: dor2062 Computer: DRBRIDGE29

PRELIMINARY

DIMENSIONS FOR BEARING DEVICES									
LOCATION	SOLE PLATE				STAINLESS STEEL		FABRIC PAD		
	A	B	C	D	E	F	G	H	J
Pier No. 1	---	---	---	---	---	---	0'-1"	0'-7"	3'-1"

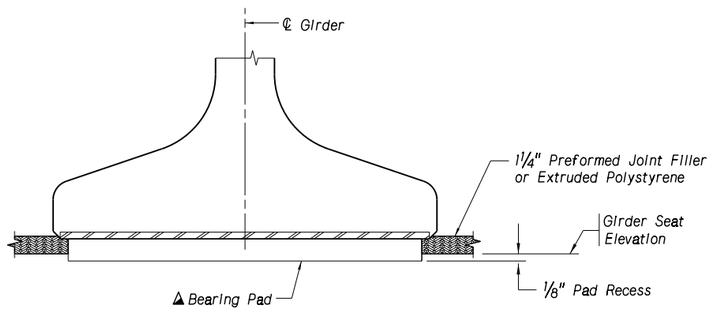

SECTION AT FIXED BEARING

AT PIER NO. 1
Not to Scale

⊿ Fabric Pads need to be inspected prior to installation. Please contact the Bridge Office a minimum of three weeks before contractor's scheduled installation for inspection.

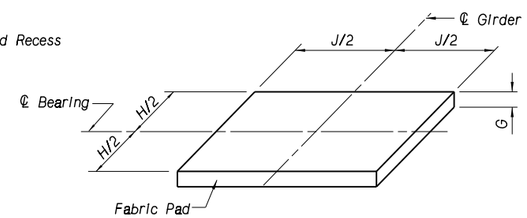

FABRIC PAD

Not to Scale

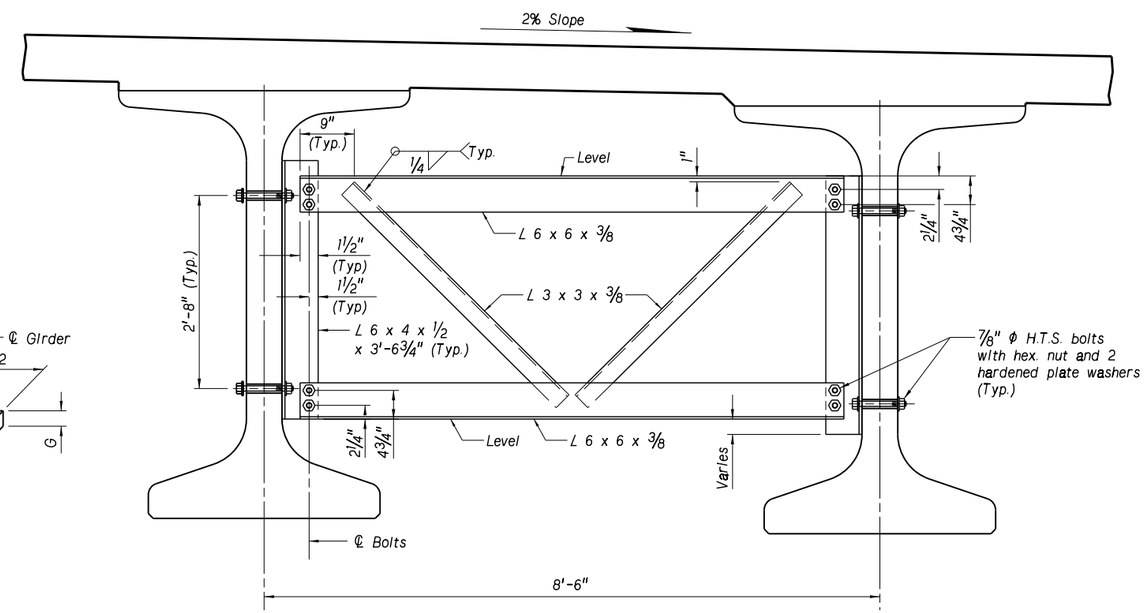

MODIFIED K-FRAME

Not to Scale

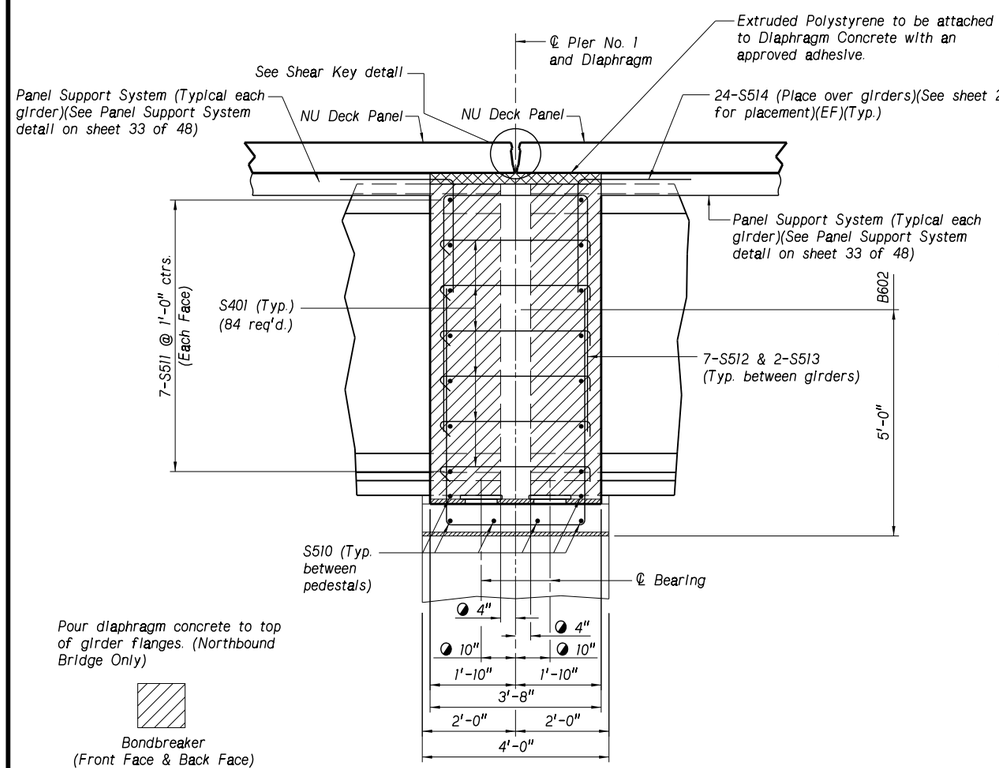

Pour diaphragm concrete to top of girder flanges. (Northbound Bridge Only)

Bondbreaker (Front Face & Back Face) (Typ. all Girders)

SECTION OF NORTHBOUND DIAPHRAGM

Not to Scale

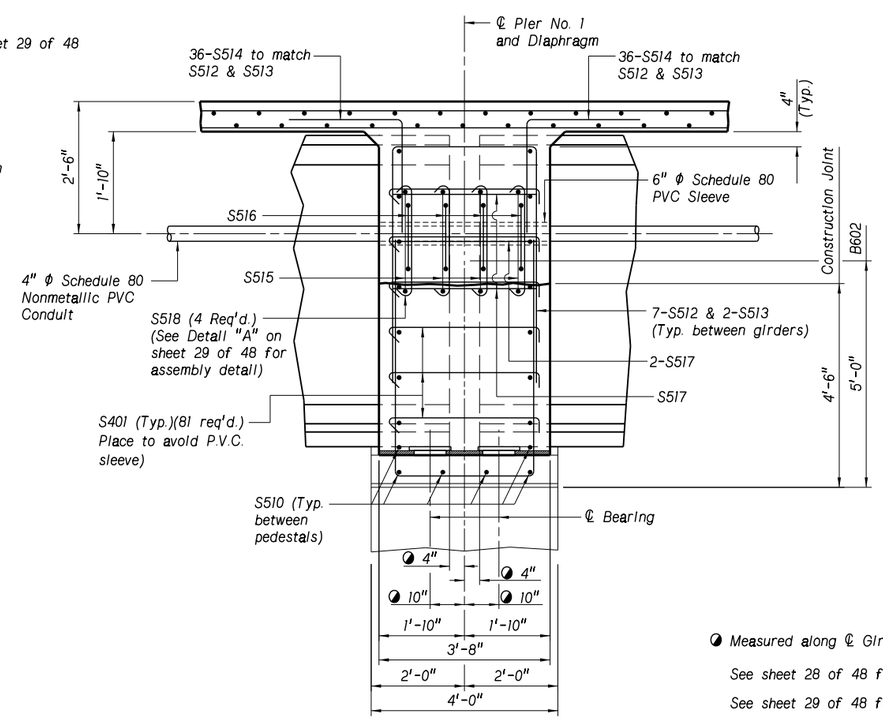

SECTION OF SOUTHBOUND DIAPHRAGM

Not to Scale

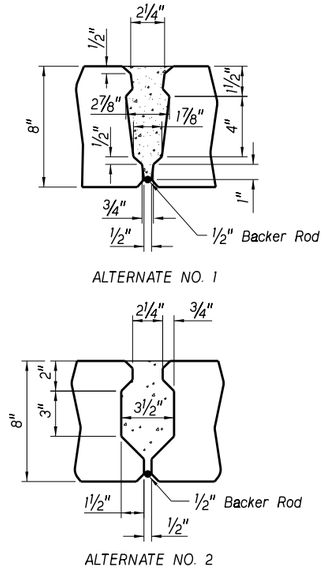

SHEAR KEY DETAILS

Not to Scale

◕ Measured along ℄ Girder.

See sheet 28 of 48 for additional Modified K-frame details.

See sheet 29 of 48 for Elevation and Plan Views of Diaphragm.

See sheet 42 of 48 for Slab and Rail on Bridge Bill of Bars.

PROJECT NUMBER	SHEET NO.
10-2(116)	

C.N. 42103B

STRUCTURE NUMBER S010 05443 L&R

PROFESSIONAL CIVIL ENGINEER MARK J. TRAYNOWICZ E-8119 STATE OF NEBRASKA

BRIDGE ENGINEER

332'-0" 2-SPAN PRESTRESSED (NU1800) GIRDER BRIDGE
SECTIONS OF DIAPHRAGM AND BEARING DETAILS

DATE APRIL 2013

CHECKED BY MJA

DETAILED BY MR

DESIGNED BY SS

COUNTY BUFFALO
HWY. NO. N-10
REF. POST.
STA. 148+18.22

LOCATION KEARNEY EAST BYPASS
SKEW 14° LHB (11th ST. TO 56th ST.)
ROADWAY 39'-0"
DESIGN LIVE LOAD HL-93

STATE OF NEBRASKA - DEPARTMENT OF ROADS - BRIDGE DIVISION

NDOR Nebraska Department of Roads

PROFESSIONAL STRUCTURAL ENGINEER M.J. STEVE SABRA E-8112 STATE OF NEBRASKA

SPECIAL PLAN NO. 1

File: c010 05443l&r_d.dgn Date: 13-AUG-2013 14:10 User: dor2062 Computer: DRBRIDGE29

PRELIMINARY

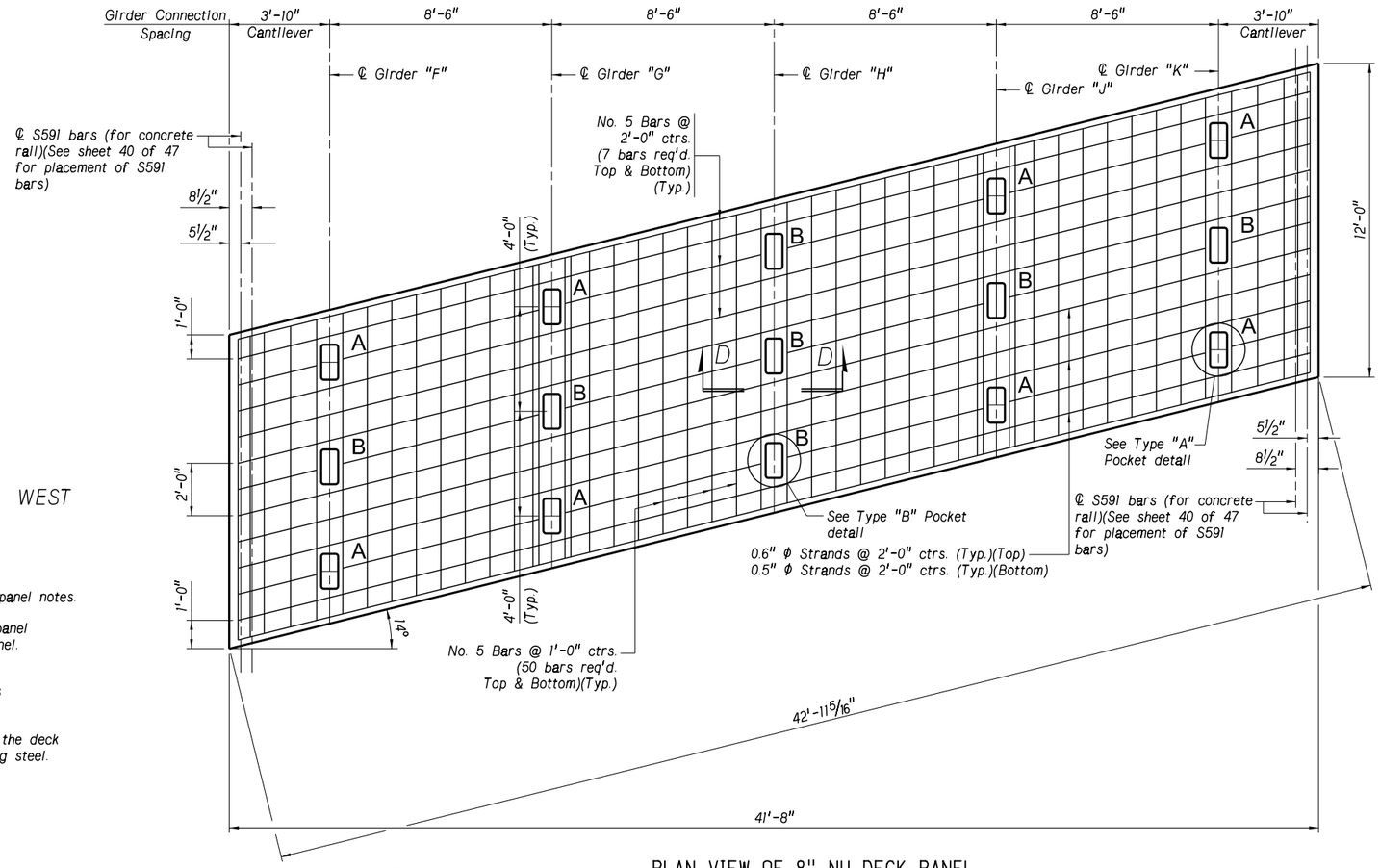

See sheet 31A of 48 for precast deck panel notes.

Provide drip bead on bottom of deck panel along the cantilever portions of the panel. See Drip Bead detail.

All reinforcing steel in the deck panels shall be non-epoxy (black) steel.

The S591 bars for the concrete rail in the deck panels shall be epoxy coated reinforcing steel.

PLAN VIEW OF 8" NU DECK PANEL

Interior Deck Panel Shown
Northbound Bridge Only

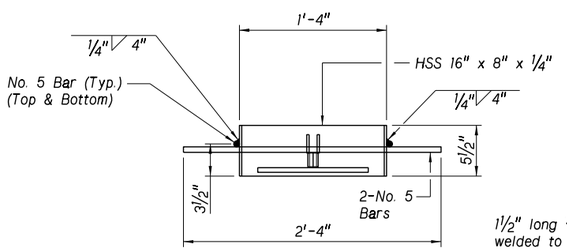

SIDE VIEW

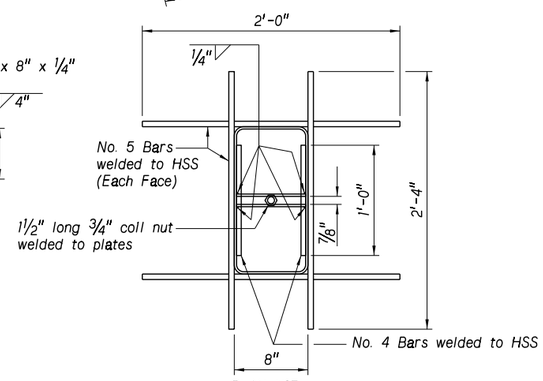

PLAN VIEW

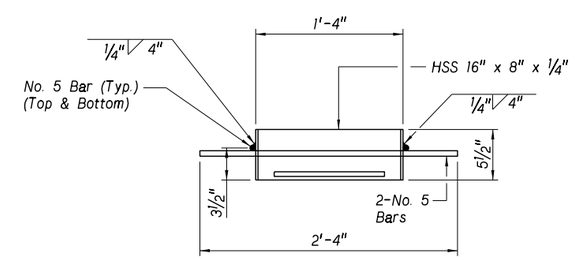

SIDE VIEW

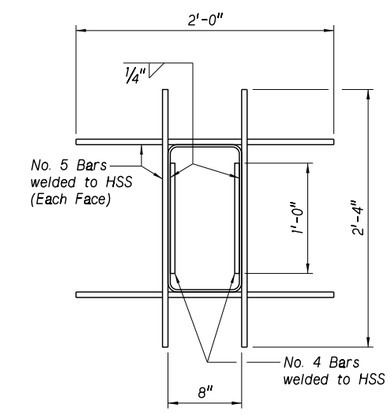

PLAN VIEW

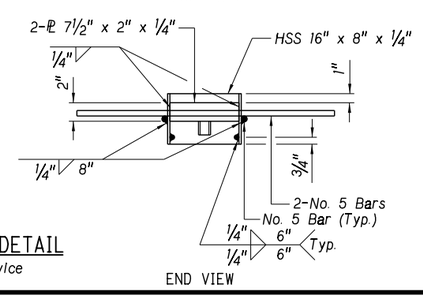

END VIEW

TYPE "A" POCKET DETAIL

Used for Lifting Device

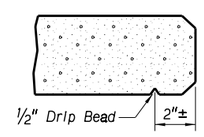

DRIP BEAD DETAIL

Not to Scale

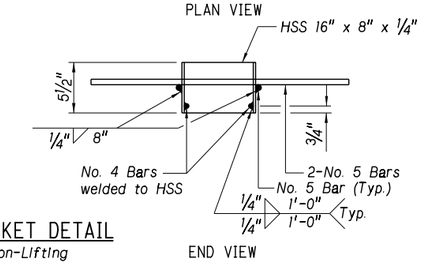

END VIEW

TYPE "B" POCKET DETAIL

Used for Non-Lifting

PROJECT NUMBER	SHEET NO.
10-2(116)	

C.N. 42103B

STRUCTURE NUMBER S010 05443 L&R

PROFESSIONAL CIVIL ENGINEER MARK J. TRAYNOWICZ E-8119 STATE OF NEBRASKA

BRIDGE ENGINEER

332'-0" 2-SPAN PRESTRESSED (NU1800) GIRDER BRIDGE
NU DECK PANEL DETAILS

LOCATION KEARNEY EAST BYPASS
SKEW 14° LHB (11th ST. TO 56th ST.)
ROADWAY 39'-0"
DESIGN LIVE LOAD HL-93

COUNTY BUFFALO
HWY. NO. N-10
REF. POST.
STA. 148+18.22

DATE APRIL 2013
DETAILED BY MR
CHECKED BY FJ
DESIGNED BY NDOR

STATE OF NEBRASKA - DEPARTMENT OF ROADS - BRIDGE DIVISION

NDOR Nebraska Department of Roads

PROFESSIONAL CIVIL ENGINEER FOUAD AH JABER E-8111 STATE OF NEBRASKA

SPECIAL PLAN NO.	31
1	48

COMPUTER$$$$
USERNAME$$$$
DATE$$$$$$$$$$$$$$
DGNSPEC$$$$$$$$$$$$$$

PRELIMINARY

PRECAST DECK PANEL NOTES:

FABRICATOR shall be responsible for exercising extreme care in lifting, handling, storing and transportation of the prestressed deck panels to prevent cracking or damage. Panels can be lifted by lifting devices and locations shown on sheet 31 of 48 (for more information, refer to the relevant NDOR research report). If different lifting devices and/or lifting locations are proposed, a demonstration panel shall be made and approved prior to panel fabrication. Lifting points and/or devices shall be shown on the shop plans.

PRETENSIONING STRAND for NU-Deck Panels shall be uncoated, seven-wire, low-relaxation steel strand of 0.5" and 0.6" nominal diameter, and shall conform to the requirements of ASTM A416, Grade 270. The 0.5" Φ strands shall be tensioned to 30.98 Kips and the 0.6" Φ strand shall be tensioned to 43.94 Kips before release, unless specified otherwise. All methods employed and procedures to be followed in tensioning the strands shall be subject to the Engineer's approval. The method chosen shall be executed in a manner to assure that both ends of all strands in the panel are uniformly tensioned. The prestressed strand shall be released in a manner that will minimize eccentricity.

CONCRETE in the panels shall be Class "47BD", with concrete strengths at stress transfer of 3.50 Ksi and at 28 days of 6.00 Ksi. No bond stress shall be transferred to the concrete nor the end anchorage released until the concrete has attained the specified strength.

STRANDS at panel ends shall be removed to a depth of one inch inside the panel edge. The resulting pocket shall be grouted with a high strength, non-shrink grout.

DECK PANEL SUPPORT SYSTEM shall provide continuous support for the panel. The ultimate load that the NU girder top flange can carry is 4 kips/ft. acting on the tip of the flange. The contractor is responsible to ensure that the deck panel support system is of adequate capacity to support the deck panels, and any construction loads that may be imposed.

REINFORCING STEEL shall conform to the requirements of ASTM designation A615/A615M, Grade 60.

DIMENSIONAL TOLERANCES shall be in accordance with the Prestressed Concrete Institute Manual for Quality Control, MNL-116-99, 4th Edition.

POST-TENSIONING NOTES:

POST-TENSIONING STRAND shall be uncoated, seven-wire, low-relaxation steel strand of 0.6" nominal diameter, and shall conform to the requirements of ASTM A416, Grade 270. Strands shall be tensioned to 43.94 Kips before release, unless specified otherwise. All methods employed and procedures to be followed in post-tensioning the strands shall be subject to the Engineer's approval. The method chosen shall be executed in a manner to assure that both ends of all strands are uniformly post-tensioned. The post-tensioned strand shall be released and anchored in a manner that will minimize eccentricity.

1. All girders shall be placed on the entire bridge prior to placement of Deck Panels.
2. The support system shall be installed on the top Girder Flange and adjusted so as to support the Deck Panels at the correct elevations by taking shim shots.
3. The NU prefabricated deck panels shall be placed as shown in the panel layout. Care should be taken that the panels are in tight contact with the backer rod separating them and that proper alignment is achieved.
4. Beginning at either end of the deck, tension two of the innermost strands at the center girder to the specified force.
5. Repeat step four, tensioning from the centroid of the strand pattern outward in both horizontal directions, so as to maintain symmetry during the post-tensioning operation. Repeat until all of the strands at one end of the deck have been tensioned.
6. Re-tension all strands at the opposite end of the deck to the required force.

FOR INFORMATION ONLY

Items Included in the pay item, "POST-TENSIONING"		
Grout	56.6	CY
.6 Φ Post-Tensioning Strands	20210	LF
Post-Tensioning Anchor Plate	82	LBS
Post-Tensioning Anchor Chucks	120	EA

PROJECT NUMBER	SHEET NO.
10-2(116)	

C.N. 42103B

STRUCTURE NUMBER S010 05443 L&R

PROFESSIONAL CIVIL ENGINEER MARK J. TRAYNOWICZ E-8119 STATE OF NEBRASKA

BRIDGE ENGINEER

332'-0" 2-SPAN PRESTRESSED (NU1800) GIRDER BRIDGE

NU DECK PANEL NOTES

DATE APRIL 2013

LOCATION KEARNEY EAST BYPASS
SKEW 14° LHB (11th ST. TO 56th ST.)
ROADWAY 39'-0"
DESIGN LIVE LOAD HL-93

COUNTY BUFFALO
HWY. NO. N-10
REF. POST.
STA. 148+18.22

DESIGNED BY NDOR DETAILED BY MR CHECKED BY FJ

STATE OF NEBRASKA - DEPARTMENT OF ROADS - BRIDGE DIVISION

NDOR Nebraska Department of Roads

PROFESSIONAL CIVIL ENGINEER FOUAD AH JABER E-8111 STATE OF NEBRASKA

SPECIAL PLAN NO. 1

File: s010 05443l&r_d.dgn Date: 11-SEP-2013 15:23 User: dor2062 Computer: DRBRIDGE29

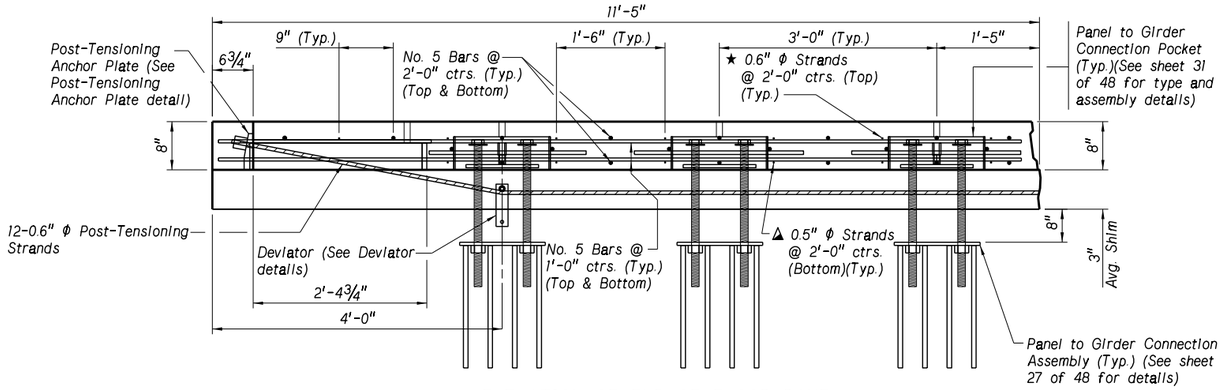

ELEVATION OF END OF FLOOR PANEL

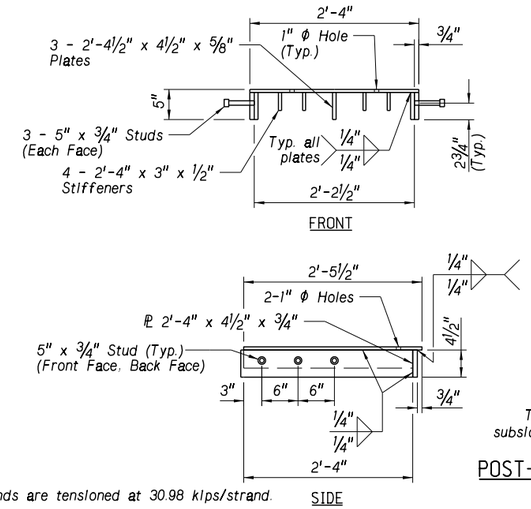

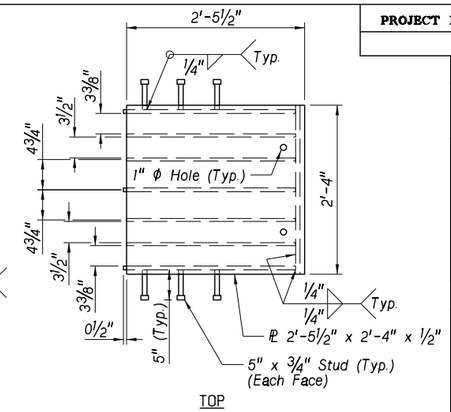

The Post-tensionning Strand Guide shall be considered subsidiary to the pay item, "NU DECK PANELS".

POST-TENSION STRAND GUIDE

▲ 0.5" ϕ Strands are tensioned at 30.98 kips/strand.

★ 0.6" ϕ Strands are tensioned at 43.94 kips/strand.

Contractor shall adjust the height of the threaded rods for the panel-to-girder connection assembly by cranking the threaded rods up to the dimensions shown on the plans.

The portion of the threaded rods embedded in the girders shall be properly greased to allow cranking the threaded rods up where needed.

◪ The angle shall be determined when site measurements become available.

PRELIMINARY

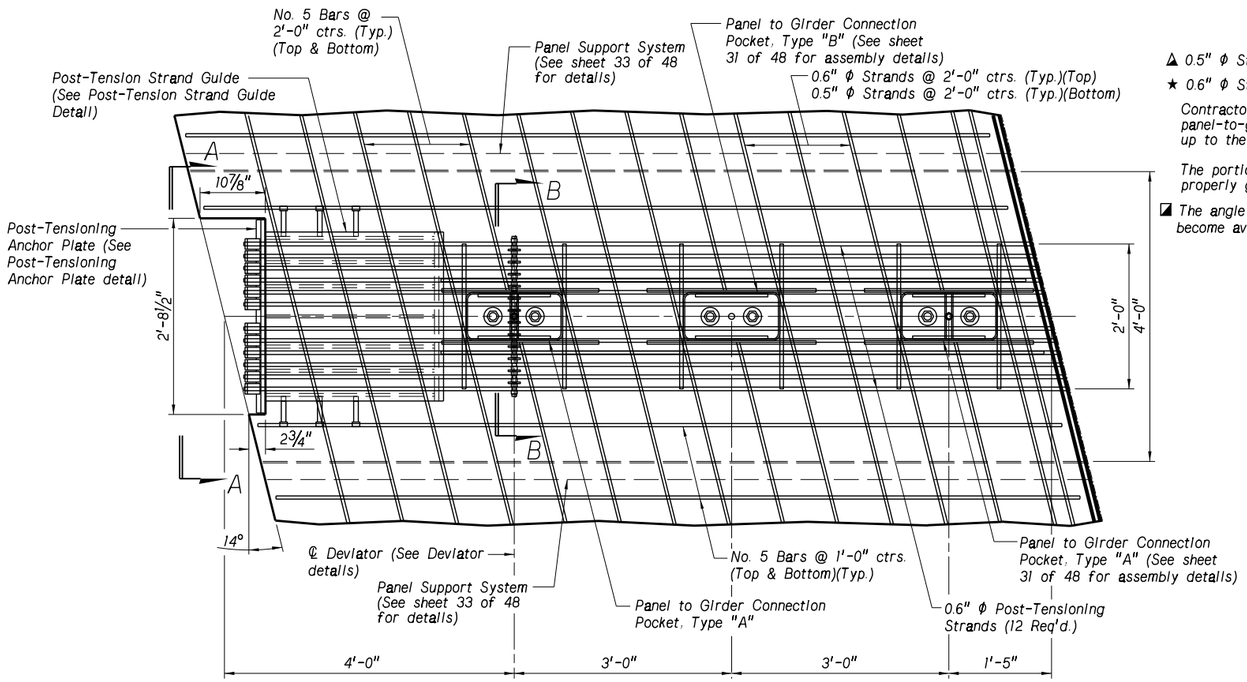

PARTIAL PLAN VIEW OF FLOOR PANEL AT END OF FLOOR

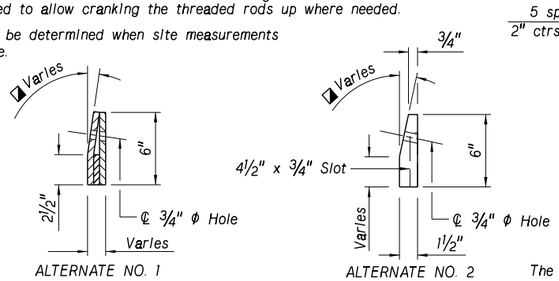

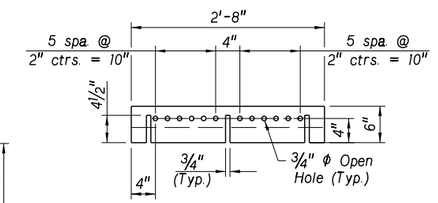

The Post-tensionning Anchor Plate shall be considered subsidiary to the pay item, "POST-TENSIONING".

POST-TENSIONING ANCHOR PLATE

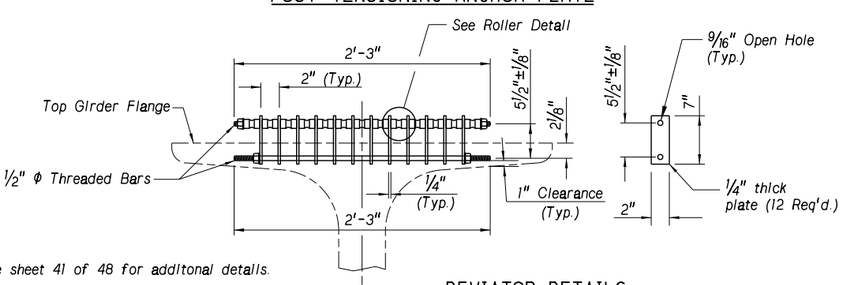

See sheet 41 of 48 for additonal details.

DEVIATOR DETAILS

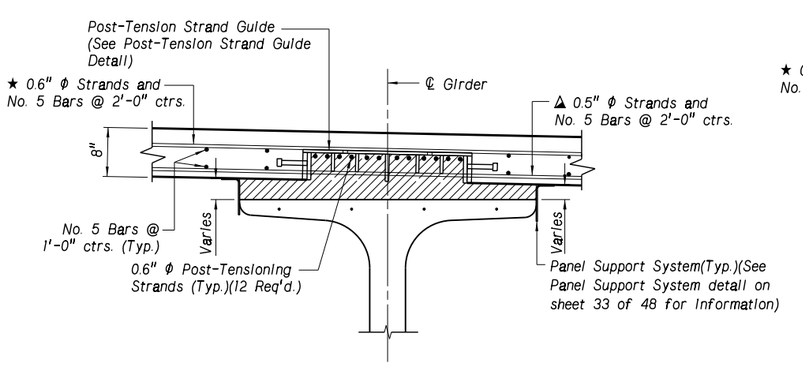

SECTION A-A

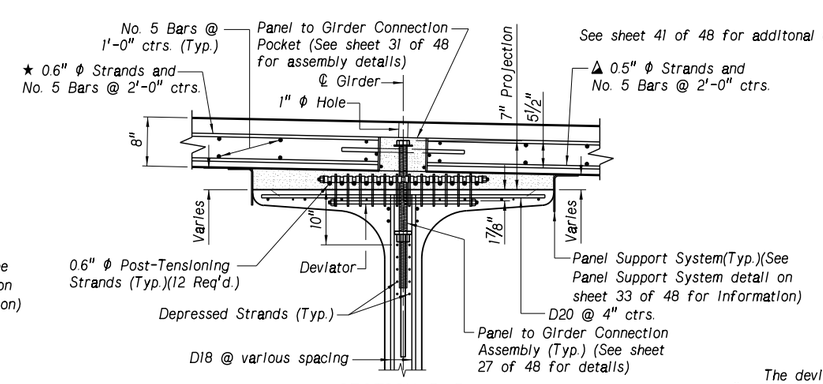

SECTION B-B

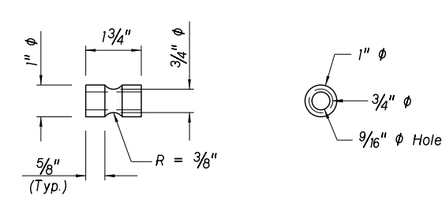

ROLLER DETAIL

The deviator shall be considered subsidiary to the pay item, "PRECAST/PRESTRESSED CONCRETE SUPERSTRUCTURE AT STATION 148+18.22".

PROJECT NUMBER	SHEET NO.
10-2(116)	

C.N. 42103B

STRUCTURE NUMBER S010 05443 L&R

PROFESSIONAL CIVIL ENGINEER MARK J. TRAYNOWICZ E-8119 STATE OF NEBRASKA

BRIDGE ENGINEER

332'-0" 2-SPAN PRESTRESSED (NU1800) GIRDER BRIDGE

END OF FLOOR PANEL DETAILS

LOCATION KEARNEY EAST BYPASS (11th ST. TO 56th ST.)
SKEW 14° LHB
ROADWAY 39'-0"
DESIGN LIVE LOAD HL-93

DATE APRIL 2013
CHECKED BY FJ
DETAILED BY MR
DESIGNED BY NDOR

COUNTY BUFFALO
HWY. NO. N-10
REF. POST.
STA. 148+18.22

STATE OF NEBRASKA - DEPARTMENT OF ROADS - BRIDGE DIVISION

NDOR Nebraska Department of Roads

PROFESSIONAL CIVIL ENGINEER FOUAD AH JABER E-8111 STATE OF NEBRASKA

SPECIAL PLAN NO. 1

COMPUTER$$$$ USERNAME$$$$ DATE$$$$$$$$$$$$$$ DGNSPEC$$$$$$$$$$$$$$

PRELIMINARY

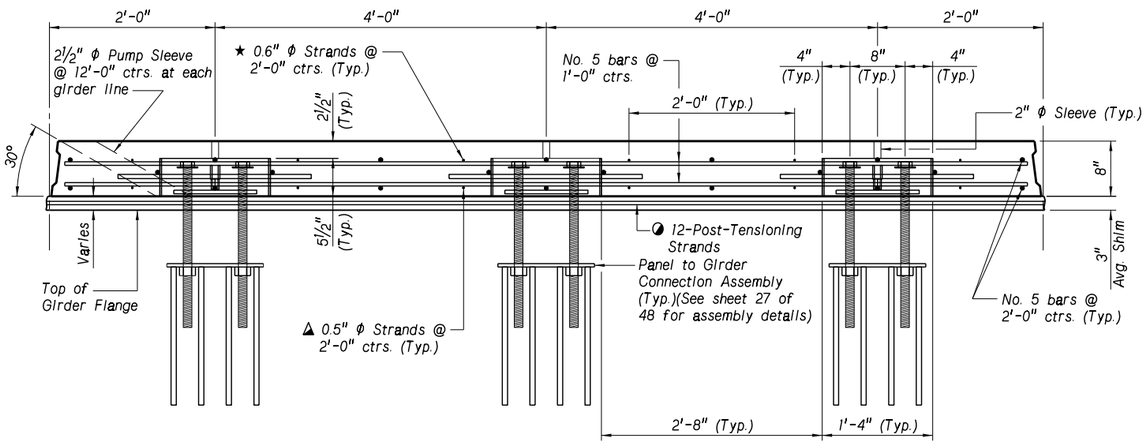

PARTIAL ELEVATION OF INTERIOR PANEL TO GIRDER CONNECTION

See sheet 32 of 48 for additional details
Not to Scale

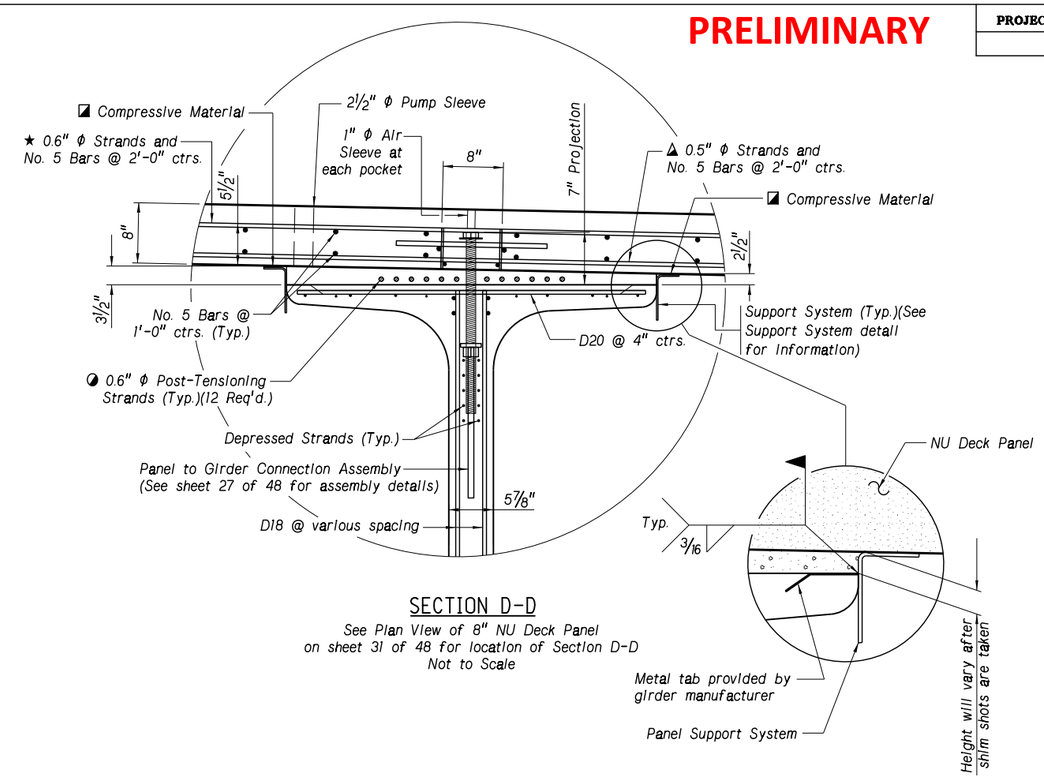

SECTION D-D

See Plan View of 8" NU Deck Panel on sheet 31 of 48 for location of Section D-D
Not to Scale

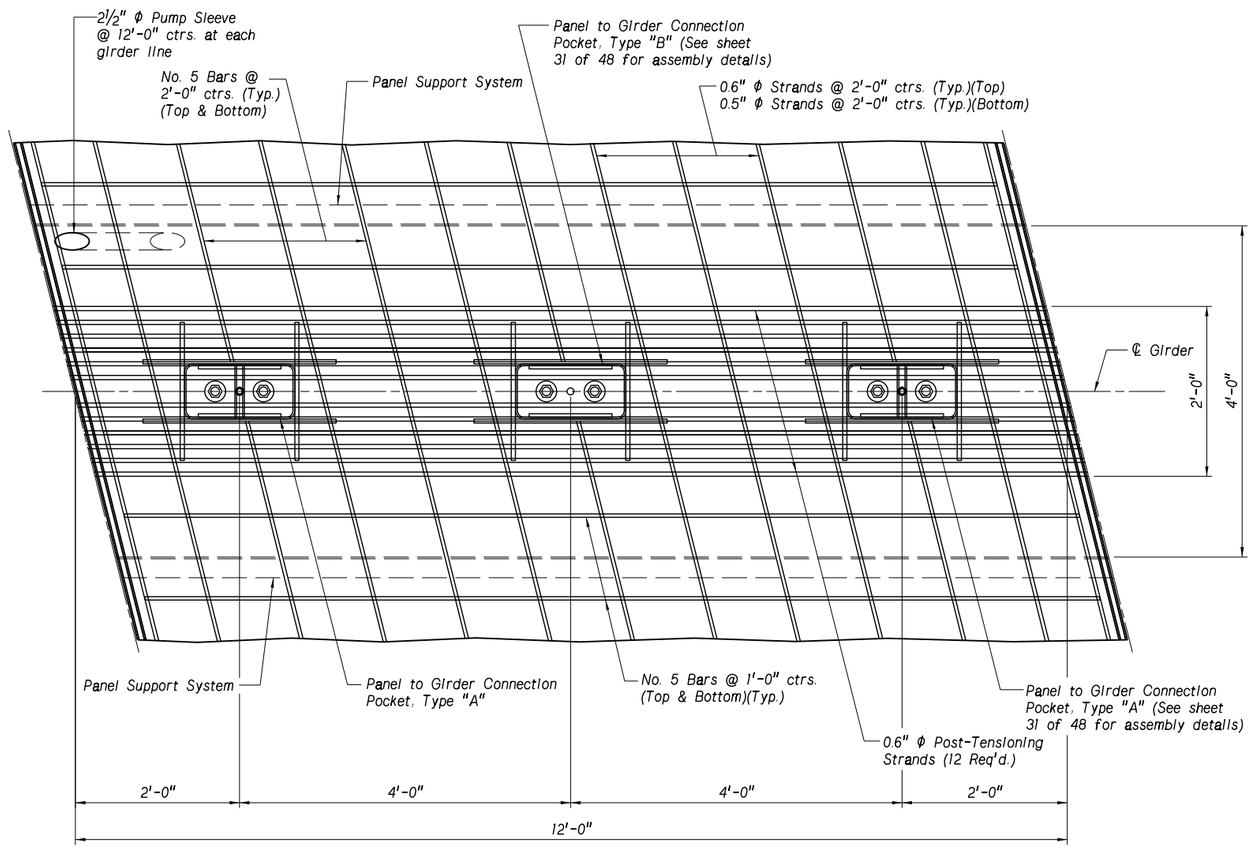

PARTIAL PLAN OF INTERIOR PANEL TO GIRDER CONNECTION

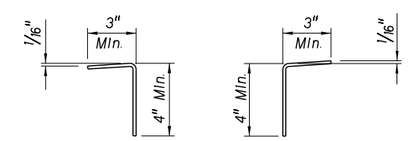

PANEL SUPPORT SYSTEM

Not to Scale
Consist of Bent Plates,
Length: 162'-6 11/16" @ Interior Girders and Interior Side of Exterior Girders,
328'-2⅞" @ Exterior Side of Exterior Girders

See sheet 31A of 48 for post-tensioning notes.

▲ 0.5" ϕ Strands are tensioned at 30.98 kips/strand.
★ 0.6" ϕ Strands are tensioned at 43.94 kips/strand.
◕ 0.6" ϕ Post-Tensioning strands tensioned to 43.94 Kips/strand.
◪ The panel support system shall be in full contact with the NU deck panels. It is the responsibility of the contractor not to allow any gaps between the panel support system and the deck panels.

The panel support system shall be considered subsidiary to the pay item, "NU-DECK PANELS".

Contractor shall adjust the height of the threaded rods for the panel-to-girder connection assembly by cranking the threaded rods up to the dimensions shown on the plans.

The portion of the threaded rods embedded in the girders shall be properly greased to allow cranking the threaded rods up where needed.

PROJECT NUMBER	SHEET NO.
10-2(116)	

C.N. 42103B

STRUCTURE NUMBER
S010 05443 L&R

PROFESSIONAL CIVIL ENGINEER MARK J. TRAYNOWICZ E-8119 STATE OF NEBRASKA

BRIDGE ENGINEER

332'-0" 2-SPAN PRESTRESSED (NU1800) GIRDER BRIDGE
NU DECK PANEL DETAILS

LOCATION KEARNEY EAST BYPASS
SKEW 14° LHB (11th ST. TO 56th ST.)
ROADWAY 39'-0"
DESIGN LIVE LOAD HL-93
DATE APRIL 2013
DETAILED BY MR
CHECKED BY FJ

COUNTY BUFFALO
HWY. NO. N-10
REF. POST.
STA. 148+18.22
DESIGNED BY NDOR

STATE OF NEBRASKA - DEPARTMENT OF ROADS - BRIDGE DIVISION

NDOR Nebraska Department of Roads

PROFESSIONAL CIVIL ENGINEER FOUAD AH JABER E-8111 STATE OF NEBRASKA

SPECIAL PLAN NO. 1

COMPUTER$$$$$
USERNAME$$$$$
DATE$$$$$$$$$$$$$$$
DGNSPEC$$$$$$$$$$$$$$

PRELIMINARY

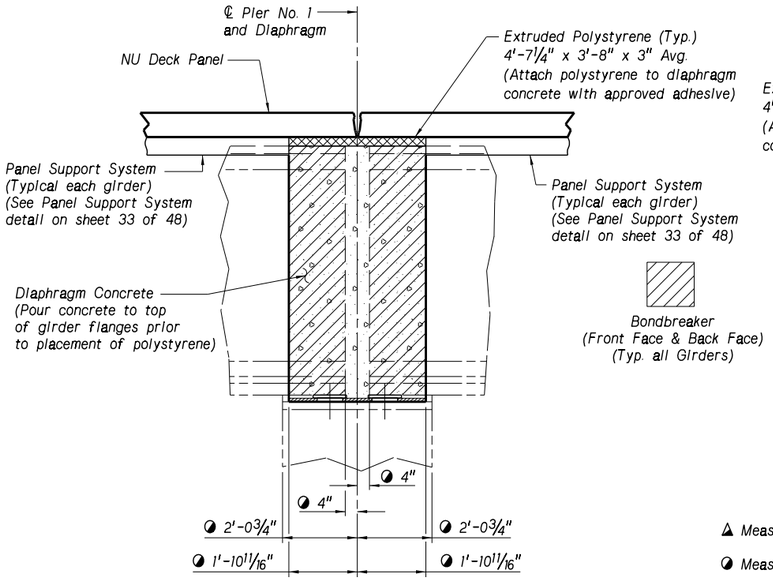

SECTION A-A
(NORTHBOUND BRIDGE ONLY)

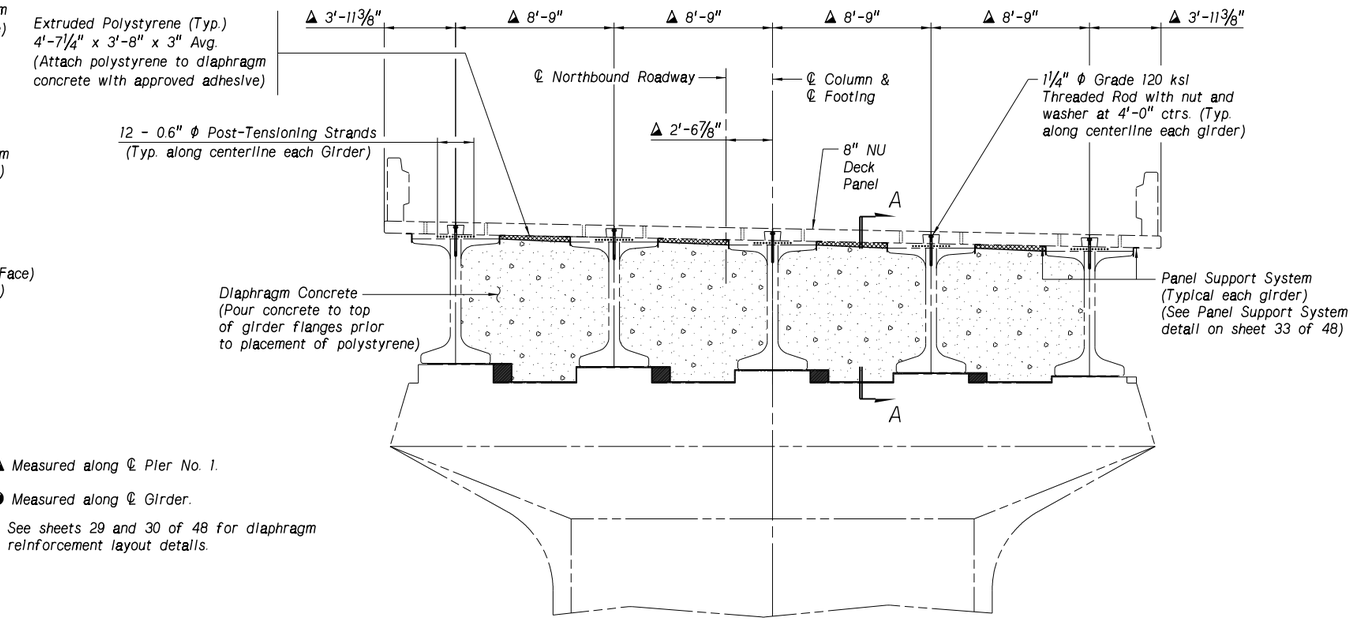

▲ Measured along ℄ Pier No. 1.

◑ Measured along ℄ Girder.

See sheets 29 and 30 of 48 for diaphragm reinforcement layout details.

ELEVATION VIEW OF NORTHBOUND DIAPHRAGM

Reinforcement Not Shown for Clarity
See sheet 29 of 47 for Layout of Diaphragm Reinforcement

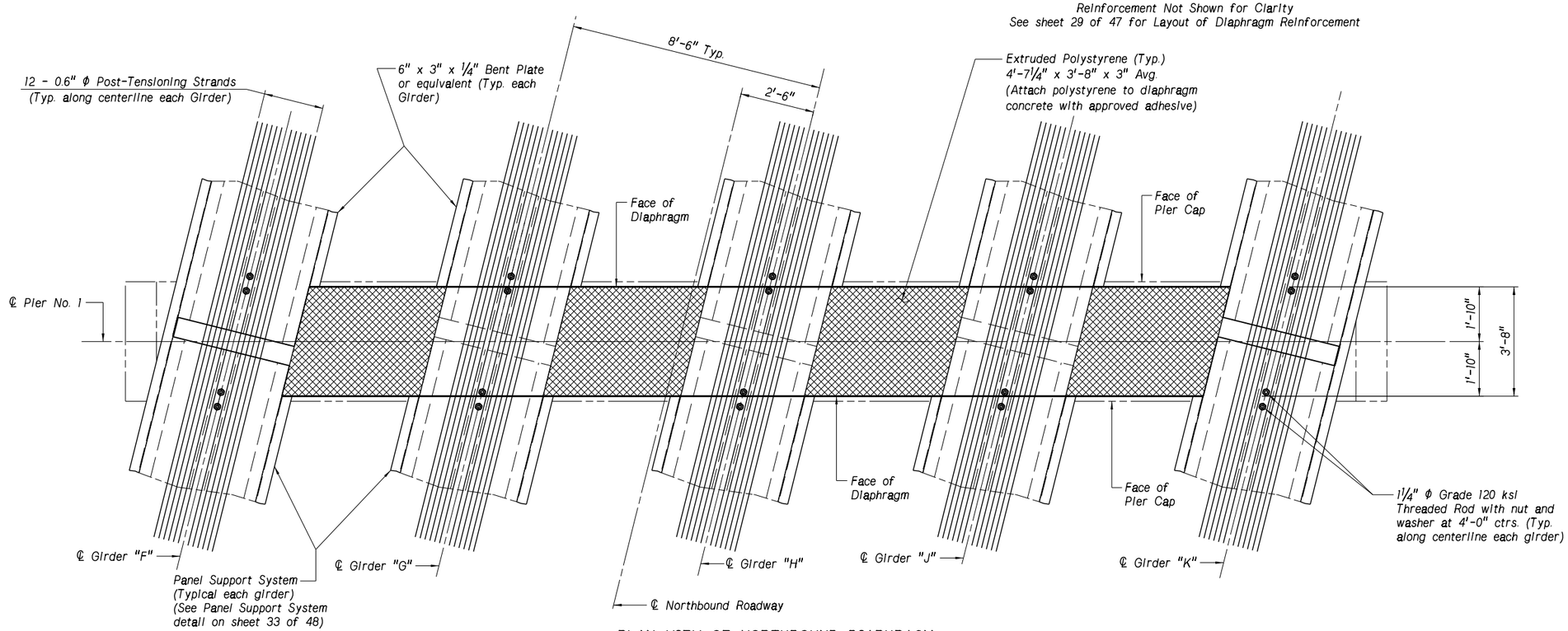

PLAN VIEW OF NORTHBOUND DIAPHRAGM

Showing Placement of Extruded Polystyrene
NU Deck Panel Not Shown for Clarity

PROJECT NUMBER	SHEET NO.
10-2(116)	

C.N. 42103B

STRUCTURE NUMBER
S010 05443 L&R

PROFESSIONAL CIVIL ENGINEER MARK J. TRAYNOWICZ E-8119 STATE OF NEBRASKA

BRIDGE ENGINEER

332'-0" 2-SPAN PRESTRESSED (NU1800) GIRDER BRIDGE
DIAPHRAGM DETAILS
(NORTHBOUND BRIDGE)

LOCATION KEARNEY EAST BYPASS
SKEW 14° LHB (11th ST. TO 56th ST.)
ROADWAY 39'-0"
DESIGN LIVE LOAD HL-93

COUNTY BUFFALO
HWY. NO. N-10
REF. POST.
STA. 148+18.22

DATE APRIL 2013
BY FJ
DETAILED BY MR
CHECKED BY FJ
DESIGNED BY NDOR

STATE OF NEBRASKA - DEPARTMENT OF ROADS - BRIDGE DIVISION

NDOR Nebraska Department of Roads

PROFESSIONAL CIVIL ENGINEER FOUAD AH JABER E-8111 STATE OF NEBRASKA

SPECIAL PLAN NO. 1

DGNSPEC$$$$$$$$$$$$$$ DATE$$$$$$$$$$$$$$$$ USERNAME$$$$$ COMPUTER$$$$$

PRELIMINARY

PROJECT NUMBER	SHEET NO.
10-2(116)	

C.N. 42103B

STRUCTURE NUMBER S010 05443 L&R

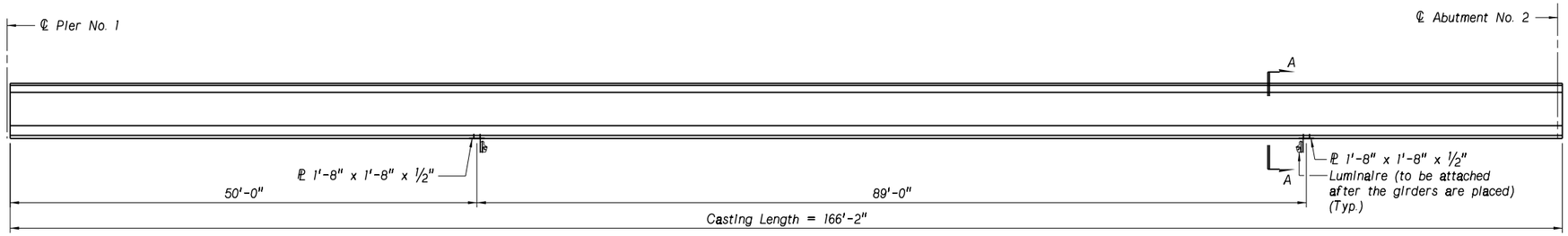

ELEVATION VIEW OF GIRDER "E" - SPAN NO. 2 (SOUTHBOUND BRIDGE ONLY)

Showing Location of Plates for Attaching Luminaires

See sheet 37 of 48 for Electrical Conduit Line Diagram.

The 1'-8" x 1'-8" x 1/2" plates shall be subsidiary to the pay item, "PRECAST/PRESTRESSED CONCRETE SUPERSTRUCTURE AT STATION 148+18.28".

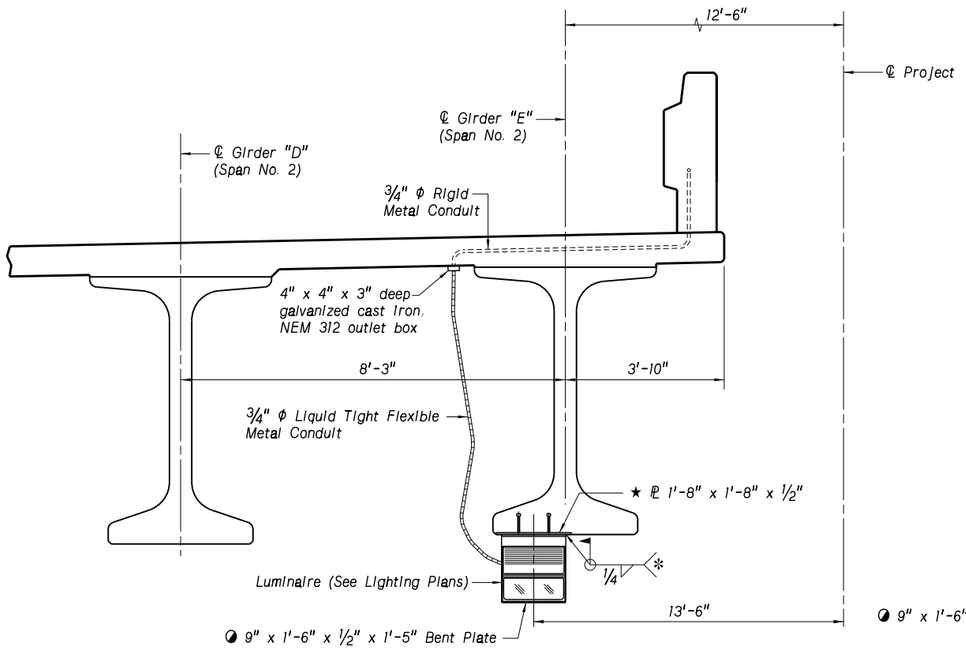

SECTION A-A
AT STA. 148+65.11 AND 149+54.11
(SOUTHBOUND BRIDGE ONLY)

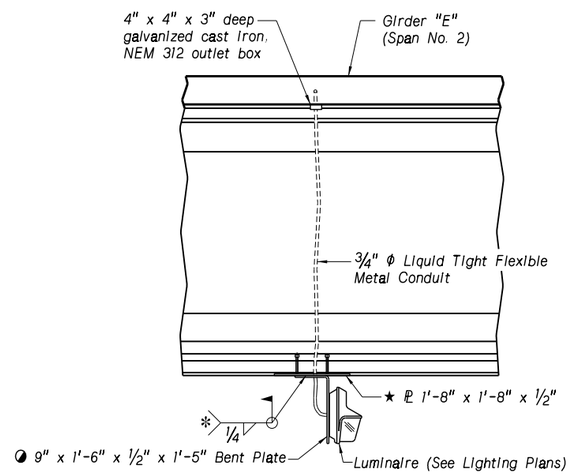

ELEVATION VIEW SHOWING LUMINAIRE
AT STA. 148+65.11 AND 149+54.11
(SOUTHBOUND BRIDGE ONLY)

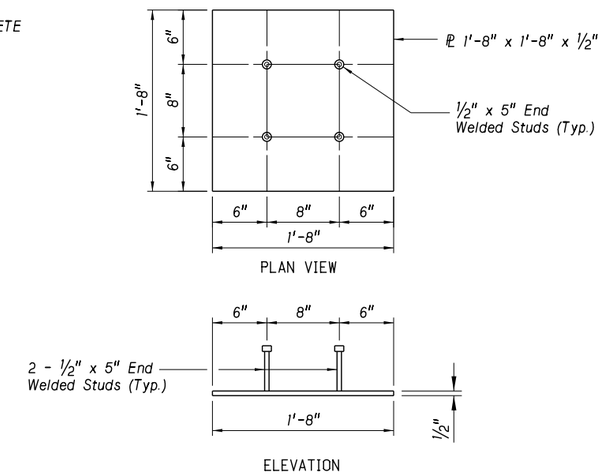

1'-8" x 1'-8" x 1/2" PLATE DETAIL
AT STA. 148+65.11 AND 149+54.11
(SOUTHBOUND BRIDGE ONLY)

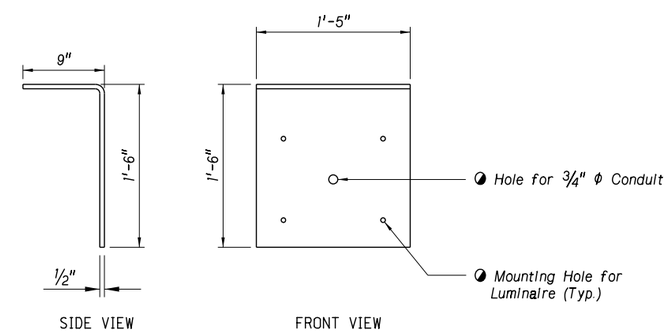

9" x 1'-6" x 1/2" x 1'-5" BENT PLATE DETAIL
(SOUTHBOUND BRIDGE ONLY)

* *Galvanized surfaces that are damaged at any time after the application of the zinc coating shall be repaired. In accordance with Section 1061 "Repair of Damaged Metallic Coatings" and ASTM A780, by thoroughly wire brushing the damaged areas, as abrasive-blasting or power-tool cleaning is not practical, and removing loose or cracked coating. After which the cleaned areas shall be painted as recommended by the paint manufacturer. Aerosol cans are acceptable to use. The contractor shall use one of the following indicated paints for which the dried film contains a minimum of 92% zinc by weight.*

PRIMER NAME	COMPANY
ZRC Galvilte Galvanizing Compound	ZRC Worldwide
High Performance Cold Galvanizing Compound Spray V2185838	Rust-oleum

◑ *Holes for mounting bolts and conduit shall be drilled after the selection of the luminaire is made to ensure the correct hole locations.*

★ LUMINAIRE LOCATIONS		
	Station	Offset from ℄ Project
Luminaire No. 1	148+65.11	13'-6" Lt.
Luminaire No. 2	149+54.11	13'-6" Lt.

BRIDGE ENGINEER

PROFESSIONAL CIVIL ENGINEER MARK J. TRAYNOWICZ E-8119 STATE OF NEBRASKA

332'-0" 2-SPAN PRESTRESSED (NU1800) GIRDER BRIDGE

LUMINAIRE DETAILS

LOCATION KEARNEY EAST BYPASS
SKEW 14° LHB (11th ST. TO 56th ST.)
ROADWAY 39'-0"
DESIGN LIVE LOAD HL-93

DATE APRIL 2013

DETAILED BY MR CHECKED BY MJA

COUNTY BUFFALO
HWY. NO. N-10
REF. POST.
STA. 148+18.22

DESIGNED BY SS

STATE OF NEBRASKA - DEPARTMENT OF ROADS - BRIDGE DIVISION

NDOR Nebraska Department of Roads

PROFESSIONAL STRUCTURAL ENGINEER M.J. STEVE SABRA E-8112 STATE OF NEBRASKA

SPECIAL PLAN NO. 1

DGNSPEC$$$$$$$$$$$$$$ DATE$$$$$$$$$$$$$$$ USERNAME$$$$$ COMPUTER$$$$$

PRELIMINARY

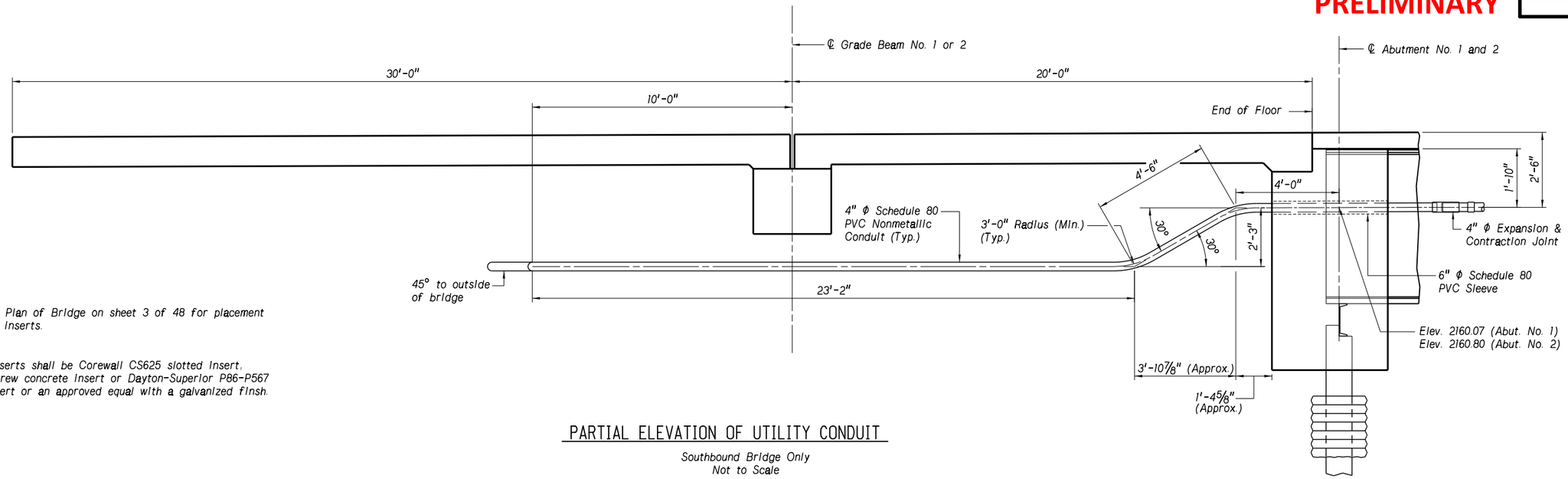

See General Plan of Bridge on sheet 3 of 48 for placement of concrete Inserts.

◑ Concrete Inserts shall be Corewall CS625 slotted Insert, Anvil 152 screw concrete Insert or Dayton-Superior P86-P567 concrete Insert or an approved equal with a galvanized finsh.

PARTIAL ELEVATION OF UTILITY CONDUIT

Southbound Bridge Only
Not to Scale

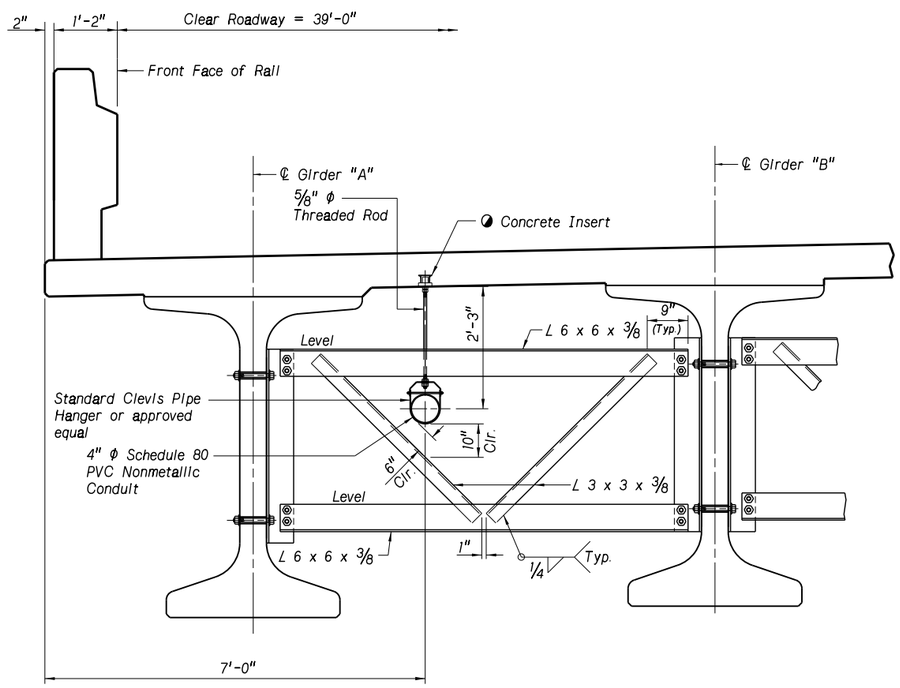

PARTIAL SECTION VIEW SHOWING PLACEMENT OF UTILITY CONDUIT

Southbound Bridge Only
Not to Scale

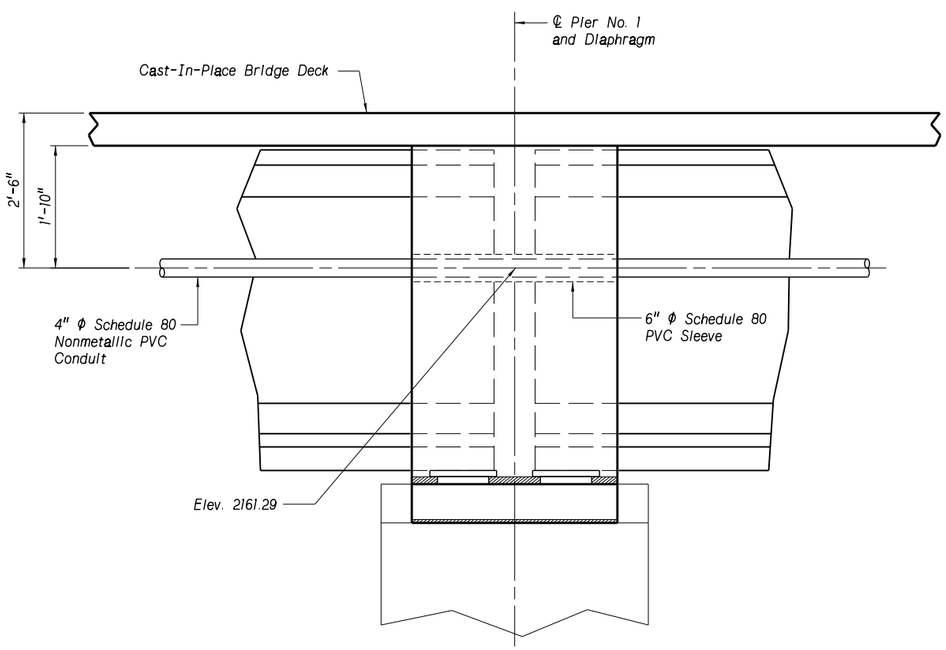

SECTION OF DIAPHRAGM AT PIER SHOWING UTILITY CONDUIT

Southbound Bridge Only
Not to Scale

PROJECT NUMBER	SHEET NO.
10-2(116)	

C.N. 42103B

STRUCTURE NUMBER
S010 05443 L&R

PROFESSIONAL CIVIL ENGINEER
MARK J. TRAYNOWICZ
E-8119
STATE OF NEBRASKA

BRIDGE ENGINEER

332'-0" 2-SPAN PRESTRESSED
(NU1800) GIRDER BRIDGE
UTILITY CONDUIT DETAILS

LOCATION KEARNEY EAST BYPASS
SKEW 14° LHB (11th ST. TO 56th ST.)
ROADWAY 39'-0"
DESIGN LIVE LOAD HL-93

COUNTY BUFFALO
HWY. NO. N-10
REF. POST.
STA. 148+18.22

DETAILED BY MR
CHECKED BY MJA
DATE APRIL 2013
DESIGNED BY SS

STATE OF NEBRASKA - DEPARTMENT OF ROADS - BRIDGE DIVISION

NDOR
Nebraska Department of Roads

PROFESSIONAL STRUCTURAL ENGINEER
M.J. STEVE SABRA
E-8112
STATE OF NEBRASKA

SPECIAL PLAN NO. 1

COMPUTER$$$$
USERNAME$$$$
DATE$$$$$$$$$$$$$$
DGNSPEC$$$$$$$$$$$$$

PRELIMINARY

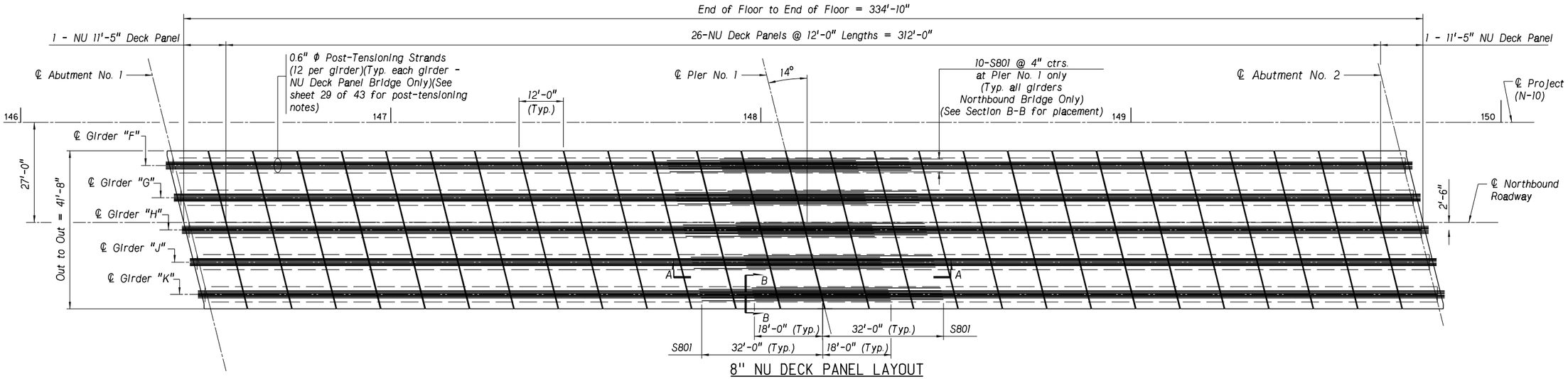

8" NU DECK PANEL LAYOUT
Northbound Bridge Only

See sheets 31, 32 and 33 of 48 for NU Deck Panel Details.

See sheet 40 of 48 for placement of rail reinforcement.

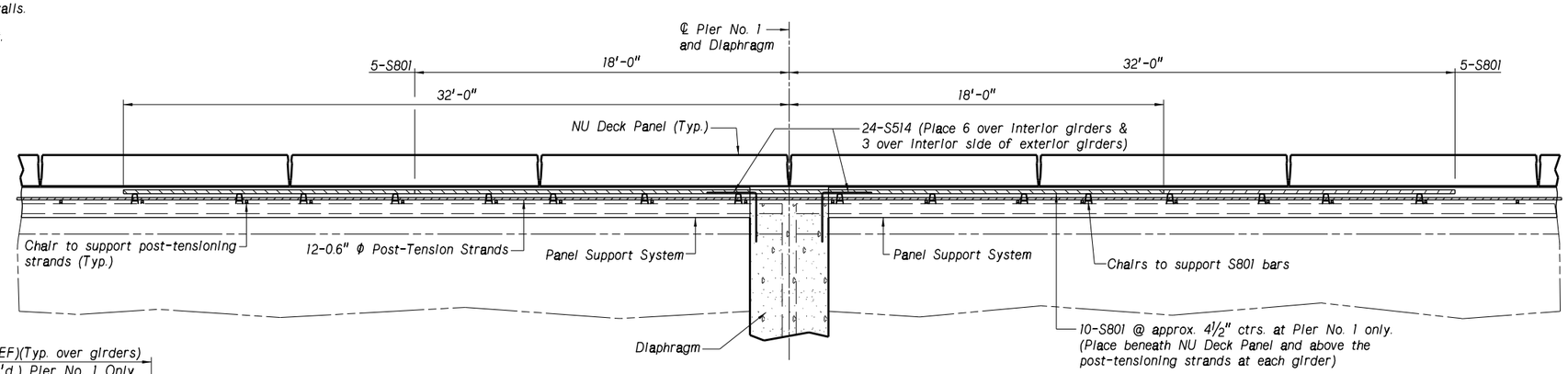

SECTION A-A
Northbound Bridge Only

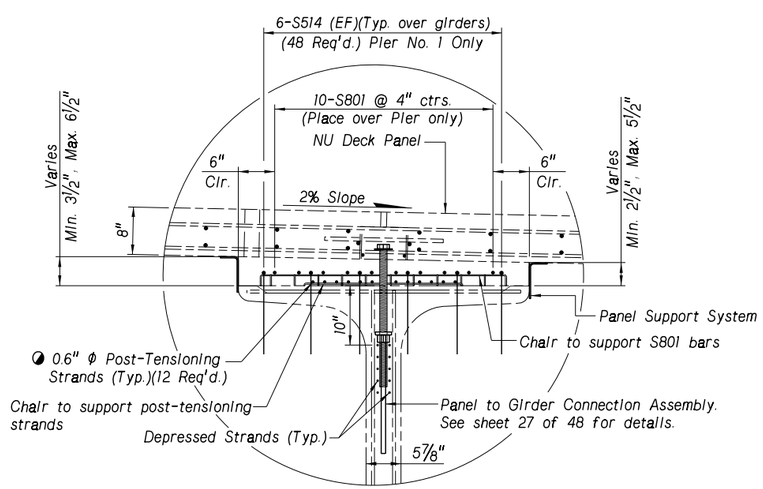

SECTION B-B
Typical All Girders
Northbound Bridge Only
Not to Scale

PROJECT NUMBER	SHEET NO.
10-2(116)	

C.N. 42103B

STRUCTURE NUMBER
S010 05443L&R

PROFESSIONAL CIVIL ENGINEER MARK J. TRAYNOWICZ E-8119 STATE OF NEBRASKA

BRIDGE ENGINEER

TWO 166'-0" SPANS CONCRETE (NU1800) GIRDER BRIDGE
NU DECK PANEL LAYOUT AND LIGHTING CONDUIT DETAILS

LOCATION KEARNEY EAST BYPASS (11th ST. to 56th ST.)
SKEW 14° LHB
ROADWAY 39'-0"
DESIGN LIVE LOAD HL-93
DATE APRIL 2013
DETAILED BY MR
CHECKED BY MJA

COUNTY BUFFALO
HWY. NO. N-10
REF. POST. 54.43
STA. 148+18.22
DESIGNED BY SS

STATE OF NEBRASKA - DEPARTMENT OF ROADS - BRIDGE DIVISION

NDOR Nebraska Department of Roads

PROFESSIONAL CIVIL ENGINEER FOUAD AH JABER E-8111 STATE OF NEBRASKA

SPECIAL PLAN NO. 1

File: c010 05443L&r_e.dgn Date: 13-AUG-2013 14:18 User: dor2062 Computer: DRBRIDGE29

PRELIMINARY

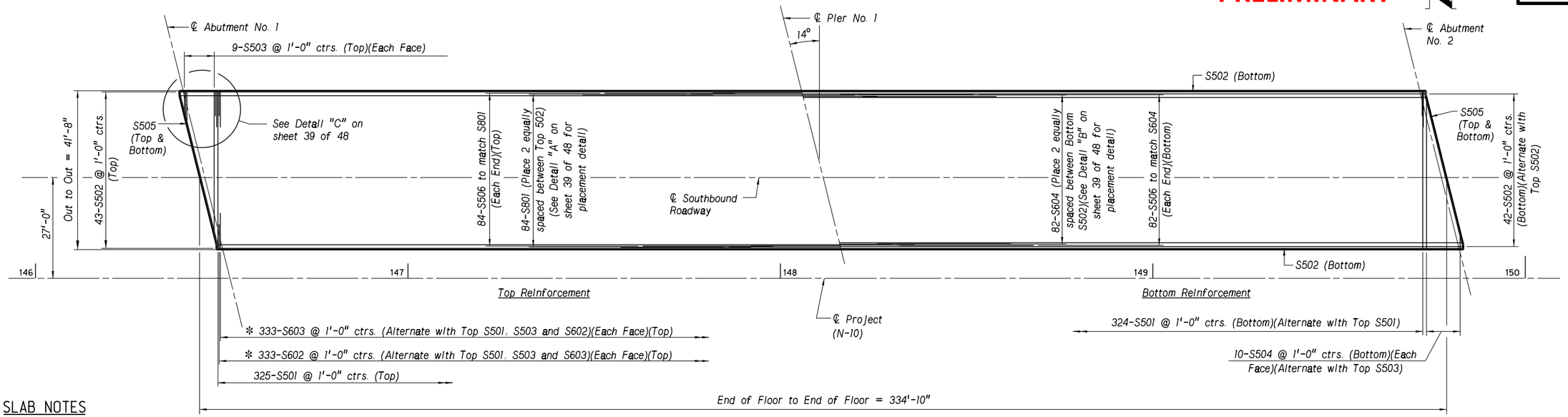

SLAB NOTES

* Field cut S602 and S603 bars as necessary to maintain 3" clearance. Apply epoxy coating to cut bar ends.

Field bend S505 bars as necessary to maintain 3" clearance.

See sheets 40 and 44 of 48 for placement of rail reinforcement.

See sheet 42 of 48 for Slab and Rail on Bridge Bill of Bars.

SLAB REINFORCING DETAIL FOR CAST-IN-PLACE DECK

Southbound Bridge Only

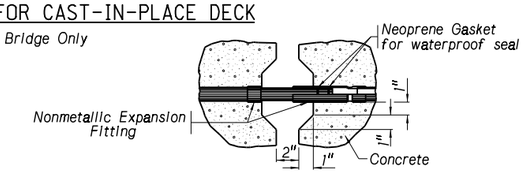

EXPANSION FITTING (4" Max. Movement†)

Not to Scale

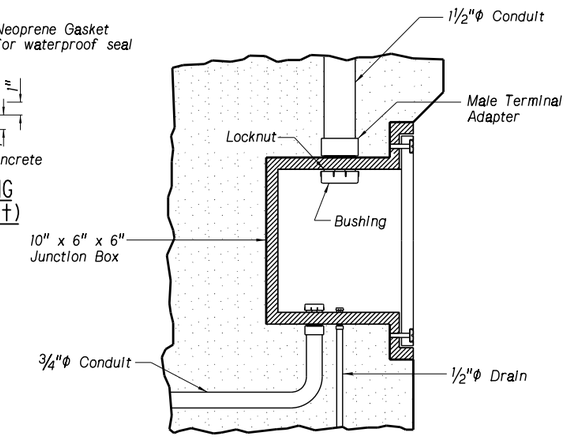

JUNCTION BOX

GENERAL NOTES - ELECTRICAL CONDUIT INSTALLATION

All conduits shall be PVC and bear the U.L. label, with the exception that conduit stub outs shall be Type GRS or FMC.

All fittings used with PVC conduit shall be PVC. Metallic fittings are not acceptable.

Expansion fittings shall be installed with conduit positioned with respect to ambient temperature and shall bear the U.L. label.

Conduit bends, elbows, and offsets shall be accurately formed.

The conduit installation shall be performed by or under the direct supervision of a competent Journeyman Electrician or Lineman.

Junction boxes for conduit shall be machineable quality gray iron castings, outside-flanged, with cover. Cover screws shall be hex head stainless steel or brass. Boxes shall be gasketed; NEMA 4, with hot dipped galvanized finish. Each junction box shall be provided with a drainpipe. Conduit entrances shall be slip holes. Sealing type lock nuts shall be used at all conduit entrances. Junction boxes shall be type "YR" as manufactured by O.Z. - Gedney, Spring City, Crouse-Hinds or approved equal.

Junction boxes, expansion fittings, all ¾" conduit, conduit drains, ¾" Liquidtight Flexible Conduit, couplings, anchor bolt assemblies and all other hardware and miscellaneous fittings required for the installation of the conduit system will be subsidiary to the item, "1½" CONDUIT IN BRIDGE".

Fittings used with Liquidtight Flexible Conduit must be approved for the application.

Anchor bolts shall conform to the requirements of AASHTO M 314, Grade 55, (length as shown).

Anchor bolts shall be threaded 4" on both ends.

Each anchor bolt shall be furnished complete with four heavy hex nuts (Grade A) meeting the requirements of AASHTO M 291 or ASTM A 563 and two hardened steel flat washer conforming to AASHTO M 293 or ASTM F 436.

All bolts, nuts, washers, and the complete bolt assembly shall be galvanized in accordance with AASHTO M 232 or ASTM A 153.

The contractor shall furnish a certification stating that the anchor bolt material meets the requirements of the applicable specifications. The certification shall include a report of tensile test results and chemical analysis. The report shall also include the name of the steel producer, AASHTO or ASTM designation number, grade, heat number, size and authorized signature.

Conduit drains with 1" projection from the concrete face, must be provided at each junction box and at low spots in the electrical conduit.

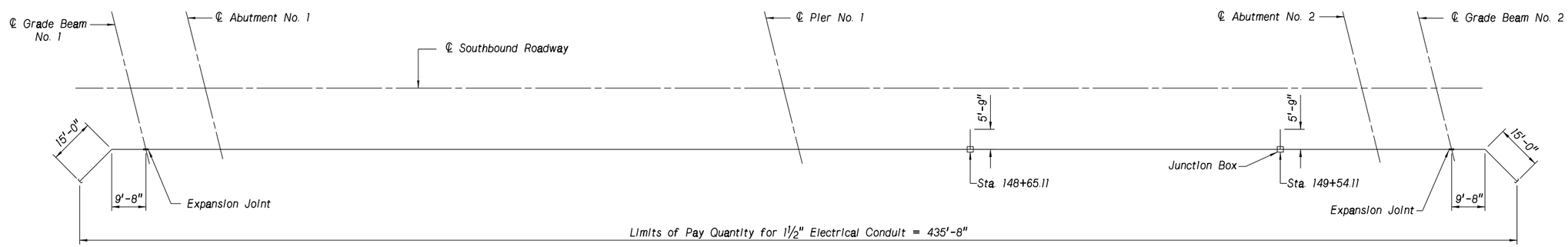

ELECTRICAL CONDUIT LINE DIAGRAM

Not to Scale

PROJECT NUMBER	SHEET NO.
10-2(116)	

C.N. 42103B

STRUCTURE NUMBER S010 05443L&R

PROFESSIONAL CIVIL ENGINEER MARK J. TRAYNOWICZ E-8119 STATE OF NEBRASKA

BRIDGE ENGINEER

COUNTY BUFFALO
HWY. NO. N-10
REF. POST. 54.43
STA. 148+18.22
DESIGNED BY SS

LOCATION KEARNEY EAST BYPASS TWO 166'-0" SPANS CONCRETE
SKEW 14° LHB (11th ST. to 56th ST.) (NU1800) GIRDER BRIDGE
ROADWAY 39'-0" SLAB REINFORCEMENT LAYOUT FOR
DESIGN LIVE LOAD HL-93 CAST-IN-PLACE DECK AND LIGHTING DETAILS
DETAILED BY MR CHECKED BY MJA DATE APRIL 2013

STATE OF NEBRASKA - DEPARTMENT OF ROADS - BRIDGE DIVISION

NDOR Nebraska Department of Roads

PROFESSIONAL STRUCTURAL ENGINEER M.J. STEVE SABRA E-8112 STATE OF NEBRASKA

SPECIAL PLAN NO. 1

File: c010 05443l&r_e.dgn Date: 02-JUL-2013 11:40 User: dor2062 Computer: DRBRIDGE29

PRELIMINARY

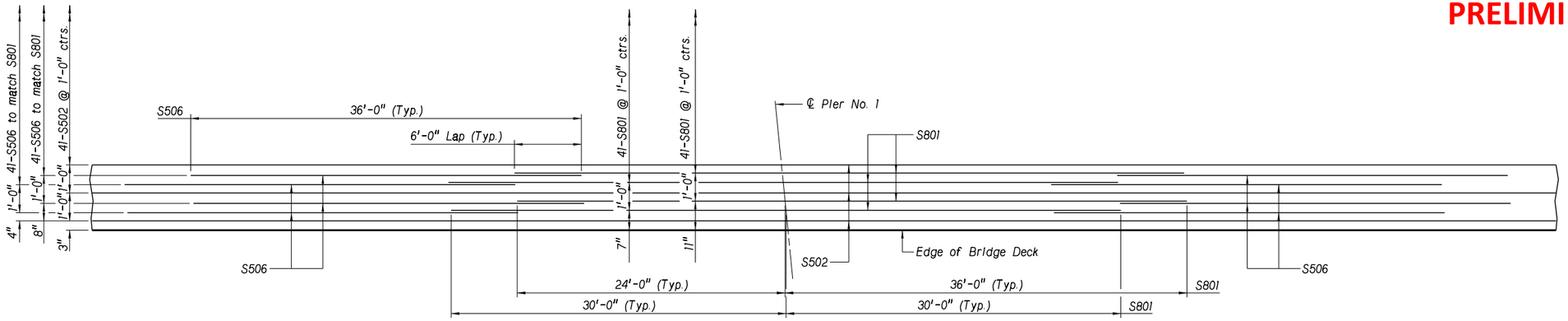

DETAIL "A"

Showing Top Reinforcement over Pier No. 1 In Cast-In-Place Deck
Only Top Reinforcing Bars Shown
See sheet 38 of 48 for Detail "A" location

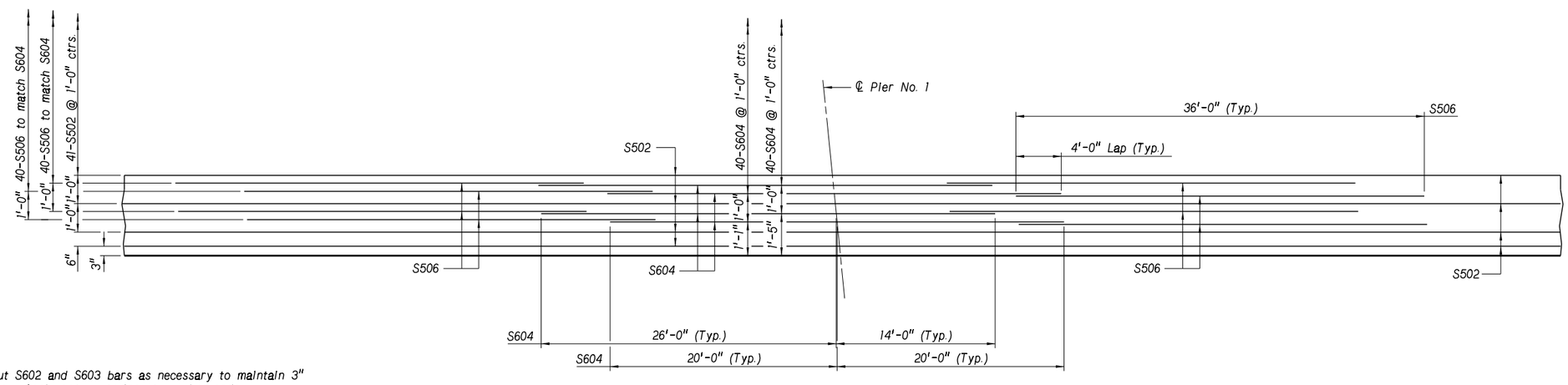

DETAIL "B"

Showing Bottom Renforcment over Pier No. 1 In Cast-In-Place Deck
Only Bottom Reinforcing Bars Shown
See sheet 38 of 48 for Detail "B" location

* Field cut S602 and S603 bars as necessary to maintain 3" clearance. Apply epoxy coating to cut bar ends.

See sheet 42 of 48 for Slab Bill of Bars.

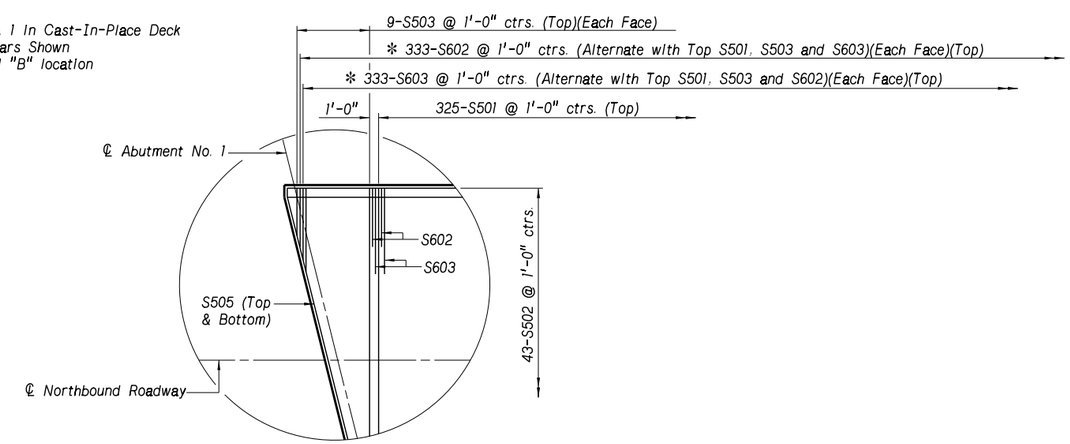

DETAIL "C"

Only Top Reinforcing Bars Shown
Southwest Corner Shown, Northeast Corner Opposite
Southbound Bridge Only
See sheet 38 of 48 for location of Detail "C"

PROJECT NUMBER	SHEET NO.
10-2(116)	

C.N. 42103B

STRUCTURE NUMBER
S010 05443L&R

PROFESSIONAL CIVIL ENGINEER
MARK J. TRAYNOWICZ
E-8119
STATE OF NEBRASKA

BRIDGE ENGINEER

TWO 166'-0" SPANS CONCRETE (NU1800) GIRDER BRIDGE
SLAB REINFORCEMENT DETAILS

LOCATION KEARNEY EAST BYPASS
SKEW 14° LHB (11th ST. to 56th ST.)
ROADWAY 39'-0"
DESIGN LIVE LOAD HL-93

DATE APRIL 2013
CHECKED BY MJA
DETAILED BY MR
DESIGNED BY SS

COUNTY BUFFALO
HWY. NO. N-10
REF. POST. 54.43
STA. 148+18.22

STATE OF NEBRASKA - DEPARTMENT OF ROADS - BRIDGE DIVISION

NDOR
Nebraska Department of Roads

PROFESSIONAL STRUCTURAL ENGINEER
M.J. STEVE SABRA
E-8112
STATE OF NEBRASKA

SPECIAL PLAN NO.	
1	39/48

File: c010 05443l&r_e.dgn Date: 02-JUL-2013 11:41 User: dor2062 Computer: DRBRIDGE29

PRELIMINARY

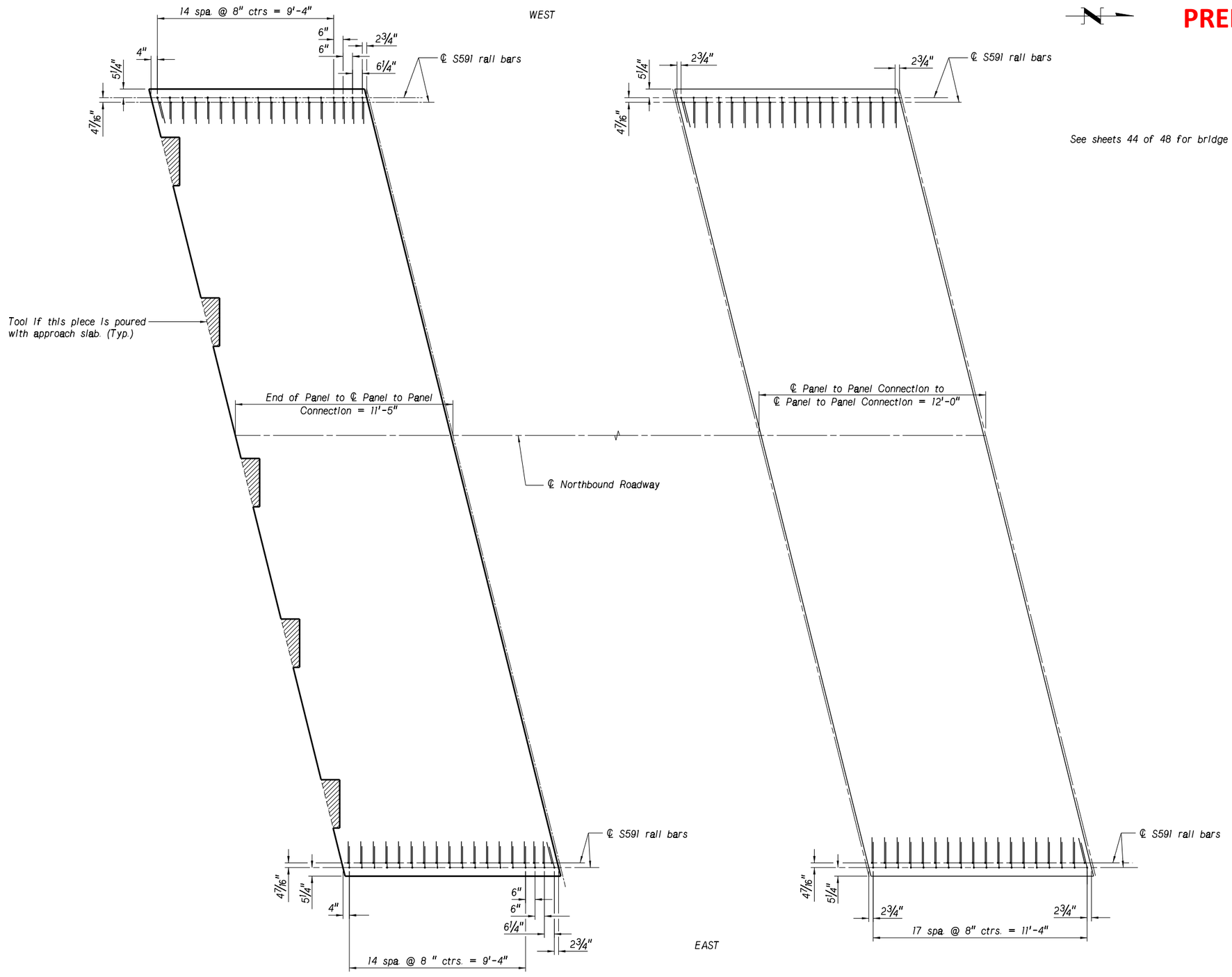

See sheets 44 of 48 for bridge rail bar locations.

END OF FLOOR PANEL
Abutment No. 1 Panel Shown.
Reinforcement and Insert Locations
Abutment No. 2 Panel Similar

INTERIOR PANEL
Reinforcement and Insert Locations
Typical to All Interior Panels

PLAN VIEW OF DECK PANELS SHOWING BRIDGE RAIL BAR LOCATIONS
(NORTHBOUND STRUCTURE ONLY)

PROJECT NUMBER	SHEET NO.
10-2(116)	

C.N. 42103B

STRUCTURE NUMBER
S010 05443L&R

PROFESSIONAL CIVIL ENGINEER
MARK J. TRAYNOWICZ
E-8119
STATE OF NEBRASKA

BRIDGE ENGINEER

TWO 166'-0" SPANS CONCRETE (NU1800) GIRDER BRIDGE
DECK PANEL RAIL BAR AND INSERTS LOCATIONS

COUNTY BUFFALO
HWY. NO. N-10
REF. POST.
STA. 148+18.22

LOCATION KEARNEY EAST BYPASS (11th ST. to 56th ST.)
SKEW 14° LHB
ROADWAY 39'-0"
DESIGN LIVE LOAD HL-93

DATE APRIL 2013

DESIGNED BY SS
DETAILED BY MR
CHECKED BY MJA

STATE OF NEBRASKA - DEPARTMENT OF ROADS - BRIDGE DIVISION

NDOR
Nebraska Department of Roads

PROFESSIONAL STRUCTURAL ENGINEER
M.J. STEVE SABRA
E-8112
STATE OF NEBRASKA

SPECIAL PLAN NO. 1

File: c010 05443l&r_e.dgn Date: 13-AUG-2013 14:19 User: dor2062 Computer: DRBRIDGE29

PRELIMINARY

PROJECT NUMBER	SHEET NO.
10-2(116)	

C.N. 42103B

STRUCTURE NUMBER S010 05443L&R

▲ Match N506 and N507 bars to N502 bars (longitudinal bars) if possible. If not possible, tie N506 and N507 bars to top N501 bars (transverse bars).

See sheets 17 and 32 of 48 for additional end of floor panel details.

See sheet 43 of 48 for approach and paving section reinforcement.

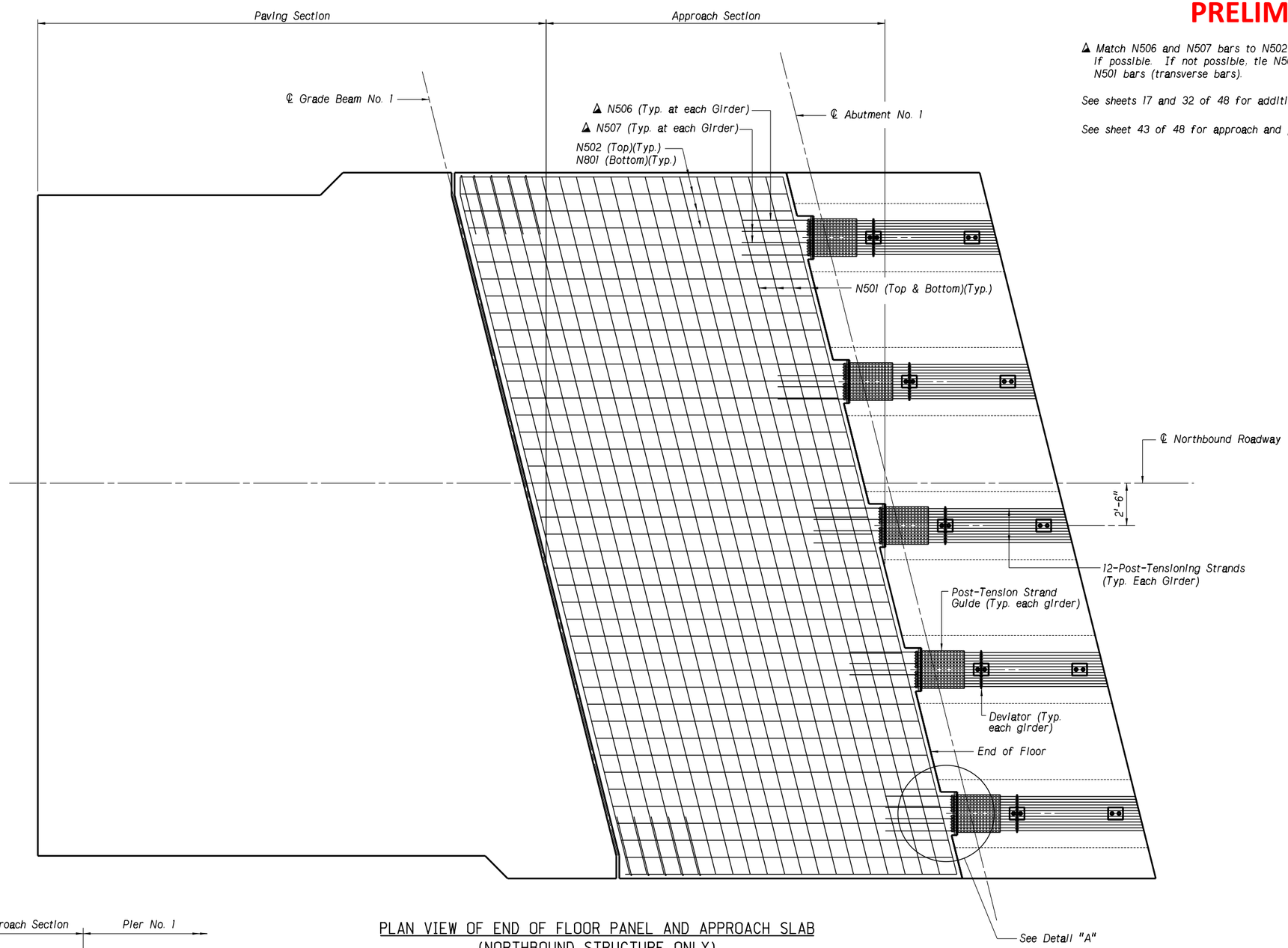

PLAN VIEW OF END OF FLOOR PANEL AND APPROACH SLAB
(NORTHBOUND STRUCTURE ONLY)

End of Floor Panel and Approach Slab No. 1 Shown
End of Floor Panel and Approach Slab No. 2 Opposite

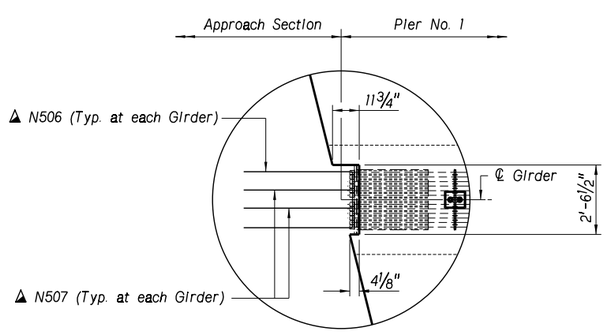

DETAIL "A"

PROFESSIONAL CIVIL ENGINEER
MARK J. TRAYNOWICZ
E-8119
STATE OF NEBRASKA

BRIDGE ENGINEER

TWO 166'-0" SPANS CONCRETE (NU1800) GIRDER BRIDGE
PLAN VIEW OF APPROACH SLAB
NORTHBOUND STRUCTURE

COUNTY BUFFALO
HWY. NO. N-10
REF. POST.
STA. 148+18.22

LOCATION KEARNEY EAST BYPASS
SKEW 14° LHB (11th ST. to 56th ST.)
ROADWAY 39'-0"
DESIGN LIVE LOAD HL-93

DATE APRIL 2013

DESIGNED BY SS
DETAILED BY MR
CHECKED BY MJA

STATE OF NEBRASKA - DEPARTMENT OF ROADS - BRIDGE DIVISION

NDOR
Nebraska Department of Roads

PROFESSIONAL STRUCTURAL ENGINEER
M.J. STEVE SABRA
E-8112
STATE OF NEBRASKA

SPECIAL PLAN NO. 1

File: c010 05443l&r_e.dgn Date: 02-JUL-2013 11:42 User: dor2062 Computer: DRBRIDGE29

BILL OF BARS

	MARK	NO.	LENGTH	TYPE	"A"	"B"	"C"	"D"	"E"	"F"	PIN	HOOK	WEIGHT LB
SLAB REINFORCEMENT (SB BRIDGE)	S801	84	60'-0"	STR.									
	S602	666	6'-6"	STR.									
	S603	666	9'-6"	STR.									
	S604	82	40'-0"	STR.									
	S501	649	41'-2"	STR.									
	S502	87	(3) 350'-2"	STR.									
	S503	18	21'-3" AVG.	STR.									
	S504	20	21'-3" AVG.	STR.									
	S505	4	43'-5"	STR.									
	S506	332	36'-0"	STR.									
	S510	24	4'-1"	STR.									
	S511	56	8'-0"	STR.									
	S512	28	27'-10"	108	5'-4"	3'-3"	5'-4"	Varies			2½"		
	S513	8	23'-2"	108	4'-2"	3'-3"	4'-2"	Varies			2½"		
	S514	72	5'-0"	104	2'-6"	2'-6"					2½"		
	S515	4	7'-11"	107	1'-9"	1'-9"					2½"	5½"	
	S516	4	4'-7"	107	0'-11"	0'-11"					2½"	5½"	
	S517	4	3'-2"	STR.									
	S518	16	2'-9"	113							2½"	5½"	
	S401	81	4'-0"	113			3'-3"				2"	4½"	
											SUBTOTAL =		LB
RAIL ON BRIDGE (SB)	S691	20	(1) 353'-6"	STR.									10619
	S591	2016	6'-4"	104	3'-2"	3'-2"					3¾"		13317
	S490	1008	4'-4"	131	2'-0"	4"	2'-0"	3"			2"		2918
	S491	2016	4'-7"	107	1'-1"	10"					2"	4½"	6172
	S492	12	(2) 347'-3"	STR.									2784
											SUBTOTAL =		35810 LB
SLAB REINFORCEMENT (NB BRIDGE)	S510	24	4'-1"	STR.									102
	S511	56	8'-0"	STR.									467
	S512	28	27'-10"	108	5'-4"	3'-3"	5'-4"	Varies			2½"		813
	S513	8	23'-2"	108	4'-2"	3'-3"	4'-2"	Varies			2½"		193
	S514	72	5'-0"	104	2'-6"	2'-6"					2½"		375
	S401	84	4'-0"	113			3'-3"				2"	4½"	224
											SUBTOTAL =		2174 LB
RAIL ON (NB) BRIDGE	S691	20	(1) 353'-6"	STR.									10619
	S591	2016	6'-4"	104	3'-2"	3'-2"					3¾"		13317
	S490	1008	4'-4"	131	2'-0"	4"	2'-0"	3"			2"		2918
	S491	2016	4'-7"	107	1'-1"	10"					2"	4½"	6172
	S492	12	(2) 347'-3"	STR.									2784
											SUBTOTAL =		35810 LB
											TOTAL =		LB

* The bill of bars shall be used for either Northbound or Southbound bridge.

BAR MARK

A413 — A 4 13

- bar number:
  - 01 thru 49, general reinforcing
  - 70 thru 79, light pole reinforcing
  - 90 thru 99, curb or rail reinforcing
- bar size
- type of bridge element - A=Abutment (P=Pier, B=Bent, S=Slab, N=Approach Slab)

(1) Includes 5 - 3'-10" lap splices.

(2) Includes 5 - 2'-7" lap splices.

(3) Includes 5 - 3'-2" lap splices

BAR SETS (SOUTHBOUND)

MARK	MAX. LENGTH	MIN. LENGTH	NO. OF SETS	BARS PER SET
S503	37'-4"	5'-2"	2	9
S504	39'-4"	3'-2"	2	10

THE NUMBER OF LAP SPLICES ARE CALCULATED BASED ON 60'-0" LENGTHS OF REINFORCING STEEL BARS. SPLICES ON BARS SHORTER THAN 60'-0" WILL REQUIRE ADDITIONAL LAP SPLICES AT NO ADDITIONAL EXPENSE TO NDOR.

STANDARD HOOK LENGTH

PRIMARY STRESS BARS			STIRRUPS & TIES		
BAR SIZE	HOOK H 90°	HOOK H 180°	BAR SIZE	HOOK H 90°	HOOK H 135°
4	8"	6"	3	4"	4"
5	10"	7"	4	4½"	4½"
6	12"	8"	5	6"	5½"
7	15"	10"	6	12"	8"
8	17"	11"	7	14"	9"
9	19"	15"	8	16"	10½"
10	23"	17"			
11	24"	19"			

d = BAR SIZE
Dp = PIN DIAMETER

PIN DIAMETER

PRIMARY STRESS		STIRRUPS & TIES	
BAR SIZE	Dp	BAR SIZE	Dp
4	3"	3	1½"
5	3¾"	4	2"
6	4½"	5	2½"
7	5¼"	6	4½"
8	6"	7	5¼"
9	9½"	8	6"
10	11"		
11	12"		

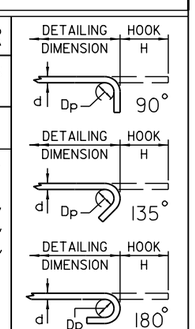

BENDING DIAGRAMS

ALL DIMENSIONS ARE OUT TO OUT & NOT TO SCALE
ALL REINFORCING STEEL SHALL BE EPOXY COATED

PRELIMINARY

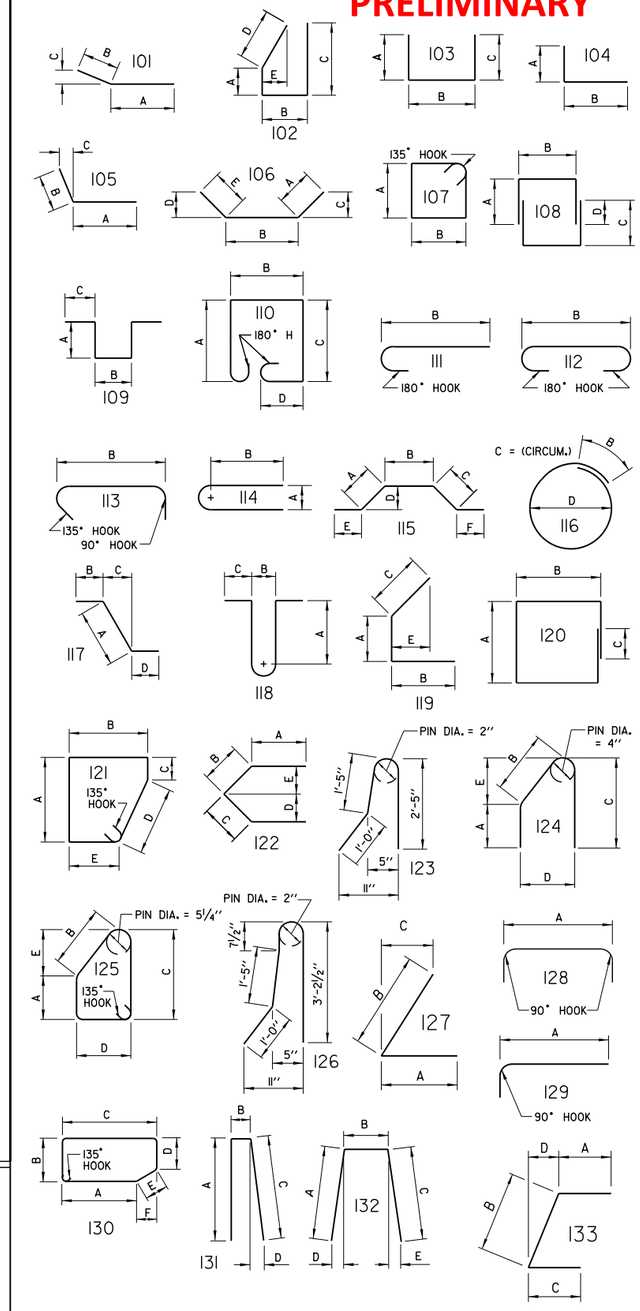

PROJECT NUMBER	SHEET NO.
10-2(116)	

C.N. 42103B

STRUCTURE NUMBER S010 05443L&R

PROFESSIONAL CIVIL ENGINEER MARK J. TRAYNOWICZ E-8119 STATE OF NEBRASKA

BRIDGE ENGINEER

TWO 166'-0" SPANS CONCRETE (NU1800) GIRDER BRIDGE
SLAB AND RAIL ON BRIDGE BILL OF BRAS

LOCATION KEARNEY EAST BYPASS
SKEW 14° LHB (11th ST. to 56th ST.)
ROADWAY 39'-0"
DESIGN LIVE LOAD HL-93
DATE APRIL 2013
DETAILED BY MR
CHECKED BY MJA
DESIGNED BY SS

COUNTY BUFFALO
HWY. NO. N-10
REF. POST. 54.43
STA. 148+18.22

STATE OF NEBRASKA - DEPARTMENT OF ROADS - BRIDGE DIVISION

NDOR Nebraska Department of Roads

PROFESSIONAL STRUCTURAL ENGINEER M.J. STEVE SABRA E-8112 STATE OF NEBRASKA

SPECIAL PLAN NO. 1

File: c010 05443l&r_e.dgn Date: 02-JUL-2013 11:41 User: dor2062 Computer: DRBRIDGE29

PRELIMINARY

PROJECT NUMBER	SHEET NO.
10-2(116)	

C.N. 42103B

STRUCTURE NUMBER S010 05443L&R

PROFESSIONAL CIVIL ENGINEER MARK J. TRAYNOWICZ E-8119 STATE OF NEBRASKA

BRIDGE ENGINEER

NOTES

All standard pipe sizes indicate Nominal Pipe Sizes (NPS). NPS does not refer to the actual inside or outside diameter of the pipe.

Fence and handrail layout shall conform to vertical alignment of the bridge. Fence posts shall be set plumb. All nuts shall be placed on the outside of the fence. Peen 3/8" bolts. Fabric shall be installed parallel to bridge floor.

Handrail and fence rails must have expansion joints placed at each roadway expansion device. Handrail shall have a minimum length of 20'-0" between splices, see Detail, and placed 12" from ℄ of Line posts.

Chain-Link fence and handrail will be galvanized and conform to the requirements of Section 1064 of the Standard Specifications. The height of the fabric shall be 7'-0".

Knuckled selvage shall be provided at the top and bottom.

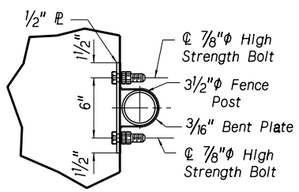

SECTION A-A

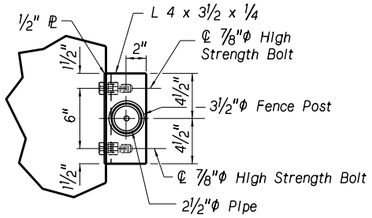

SECTION B-B

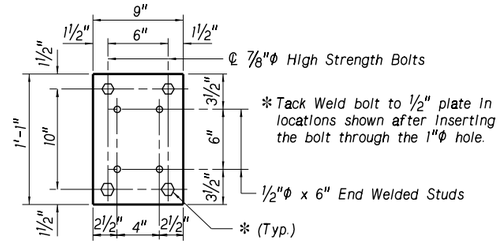

SECTION C-C
(1/2" ℙ)

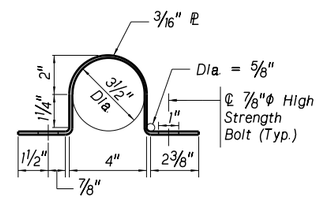

PLAN VIEW OF BENT PLATE

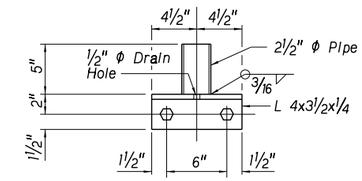

ELEVATION OF ANGLE AND PIPE

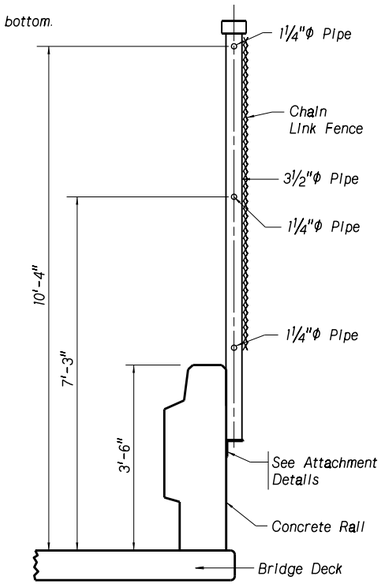

SECTION OF CHAIN LINK FENCE

▲ Place weld on down grade side of joint.

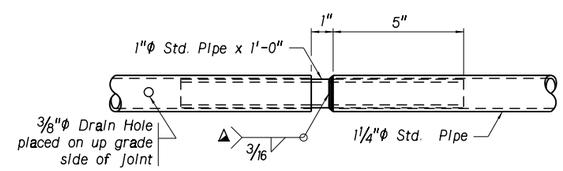

EXPANSION JOINT DETAILS

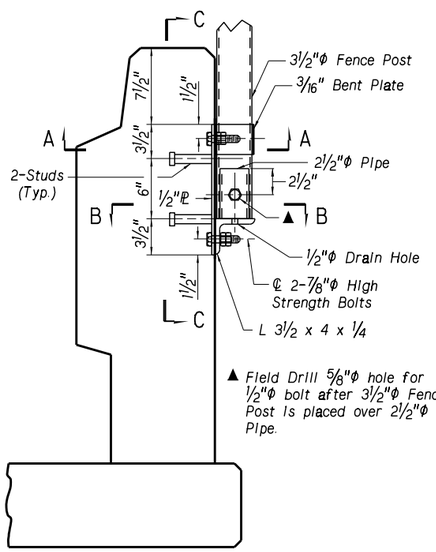

▲ Field Drill 5/8"φ hole for 1/2"φ bolt after 3 1/2"φ Fence Post is placed over 2 1/2"φ Pipe.

SECTION OF FENCE ATTACHMENT TO CONCRETE RAIL

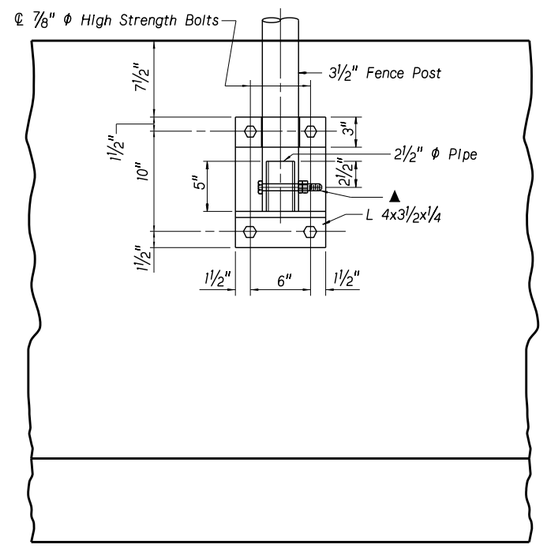

ELEVATION OF FENCE ATTACHMENT TO BACK OF CONCRETE RAIL

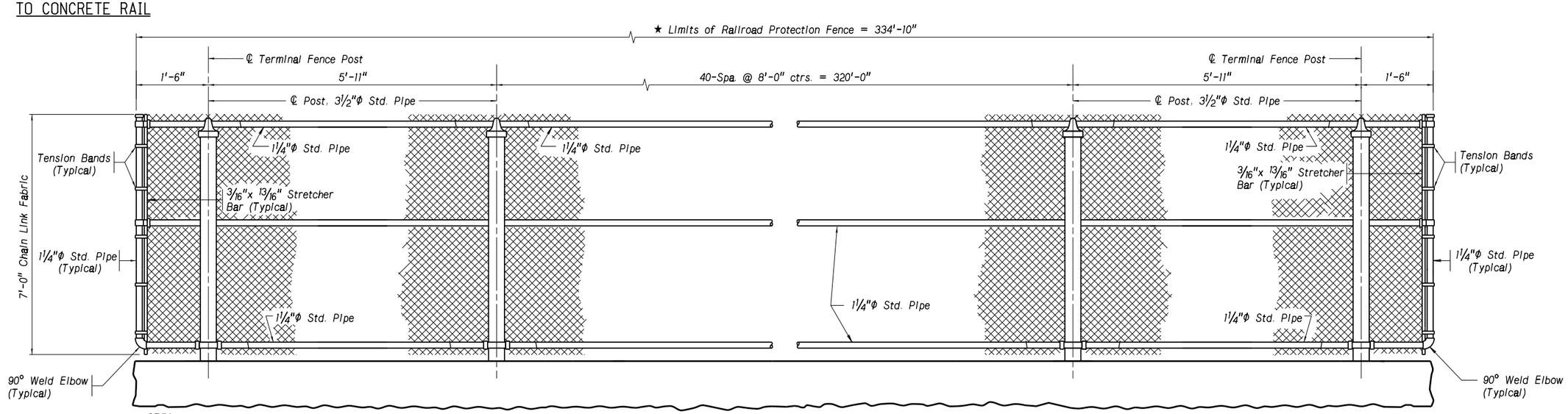

NOTES:
For Chain Link Fence location see sheets 2 and 3 of 48.
See sheet 47 of 48 for alternate chain link fence details.
★ Measured at Front Face of Rail.

ELEVATION OF CHAIN LINK FENCE
Not to Scale

TWO 166'-0" SPANS CONCRETE (NU1800) GIRDER BRIDGE
CHAIN LINK FENCE DETAILS

LOCATION KEARNEY EAST BYPASS
SKEW 14° LHB (11th ST. to 56th ST.)
ROADWAY 39'-0"
DESIGN LIVE LOAD HL-93
CHECKED BY MJA
DATE APRIL 2013
DETAILED BY MR
DESIGNED BY SS

COUNTY BUFFALO
HWY. NO. N-10
REF. POST.
STA. 148+18.22

STATE OF NEBRASKA - DEPARTMENT OF ROADS - BRIDGE DIVISION

NDOR Nebraska Department of Roads

PROFESSIONAL STRUCTURAL ENGINEER M.J. STEVE SABRA E-8112 STATE OF NEBRASKA

SPECIAL PLAN NO.	46
1	48

PRELIMINARY

PROJECT NUMBER	SHEET NO.
10-2(116)	

C.N. 42103B

STRUCTURE NUMBER S010 05443L&R

BRIDGE ENGINEER

NOTES

All standard pipe sizes indicate Nominal Pipe Sizes (NPS). NPS does not refer to the actual inside or outside diameter of the pipe.

Fence and handrail layout shall conform to vertical alignment of the bridge. Fence posts shall be set plumb. All nuts shall be placed on the outside of the fence. Peen 3/8" bolts. Fabric shall be installed parallel to bridge floor.

Handrail and fence rails must have expansion joints placed at each roadway expansion device. Handrail shall have a minimum length of 20'-0" between splices, see Detail, and placed 12" from ℄ of Line posts.

Chain-Link fence and handrail will be galvanized and conform to the requirements of Section 1064 of the Standard Specifications. The height of the fabric shall be 7'-0".

Knuckled selvage shall be provided at the top and bottom.

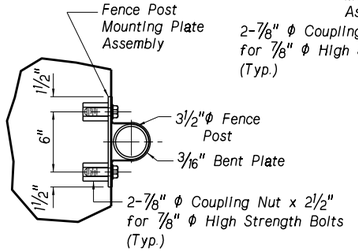

SECTION E-E

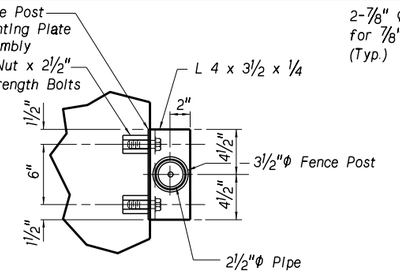

SECTION D-D

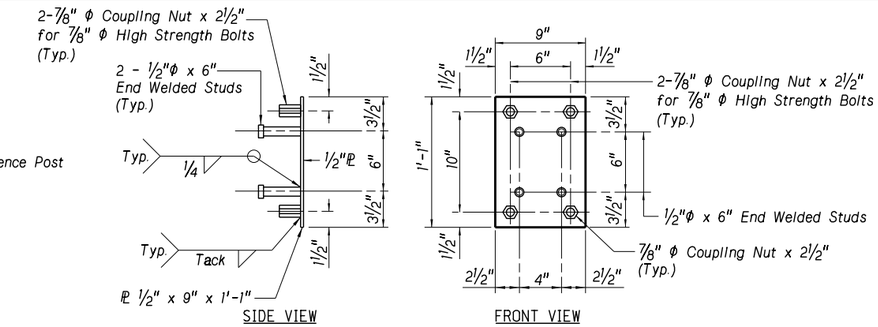

FENCE POST MOUNTING PLATE ASSEMBLY

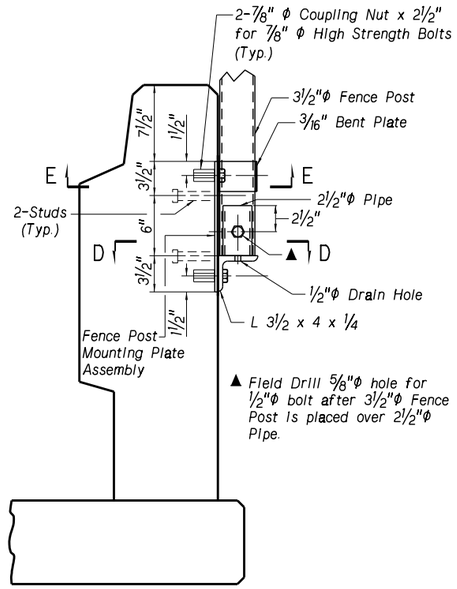

SECTION OF FENCE ATTACHMENT TO CONCRETE RAIL

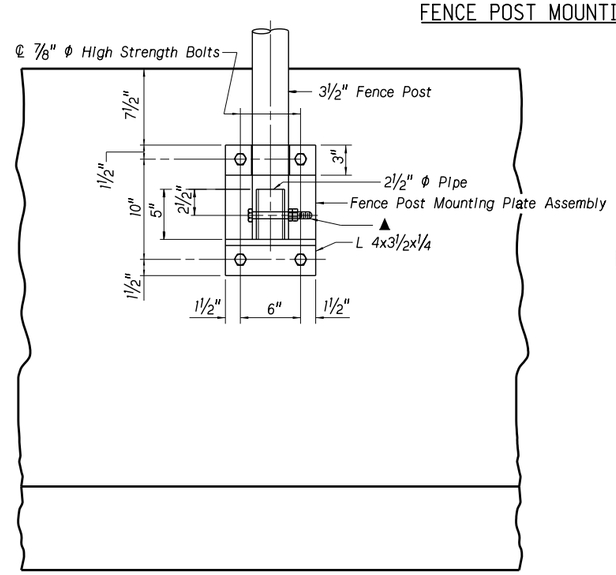

ELEVATION OF FENCE ATTACHMENT TO BACK OF CONCRETE RAIL

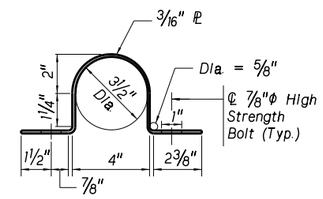

PLAN VIEW OF BENT PLATE

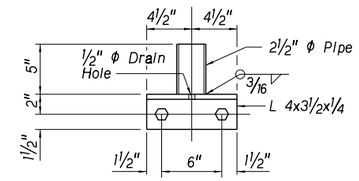

ELEVATION OF ANGLE AND PIPE

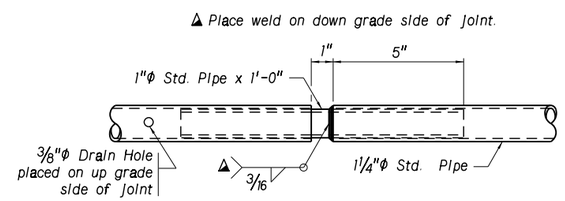

EXPANSION JOINT DETAILS

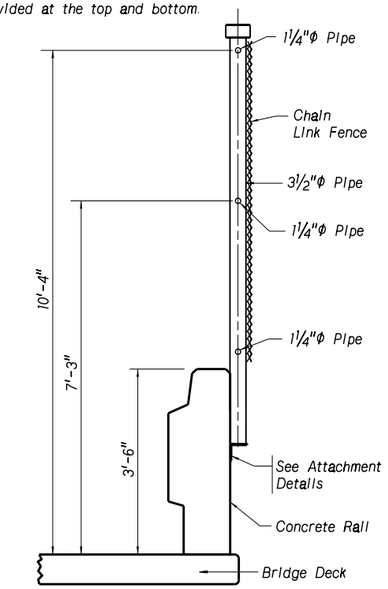

SECTION OF CHAIN LINK FENCE

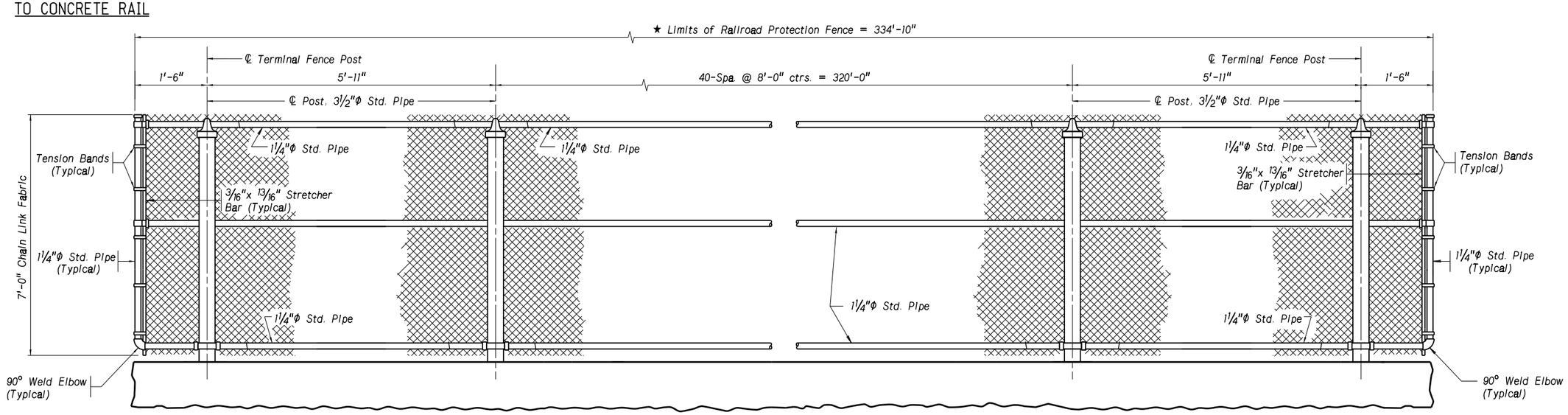

NOTES:
For Chain Link Fence location see sheets 2 and 3 of 48.
★ Measured at Front Face of Rail.

ELEVATION OF CHAIN LINK FENCE
Not to Scale

COUNTY BUFFALO
HWY. NO. N-10
REF. POST.
STA. 148+18.22

LOCATION KEARNEY EAST BYPASS
SKEW 14° LHB (11th ST. to 56th ST.)
ROADWAY 39'-0"
DESIGN LIVE LOAD HL-93

TWO 166'-0" SPANS CONCRETE (NU1800) GIRDER BRIDGE
ALTERNATE CHAIN LINK FENCE DETAILS

DESIGNED BY SS
DETAILED BY MR
CHECKED BY MJA
DATE APRIL 2013

STATE OF NEBRASKA - DEPARTMENT OF ROADS - BRIDGE DIVISION

PROFESSIONAL CIVIL ENGINEER MARK J. TRAYNOWICZ E-8119 STATE OF NEBRASKA

NDOR Nebraska Department of Roads

PROFESSIONAL STRUCTURAL ENGINEER M.J. STEVE SABRA E-8112 STATE OF NEBRASKA

SPECIAL PLAN NO. 1

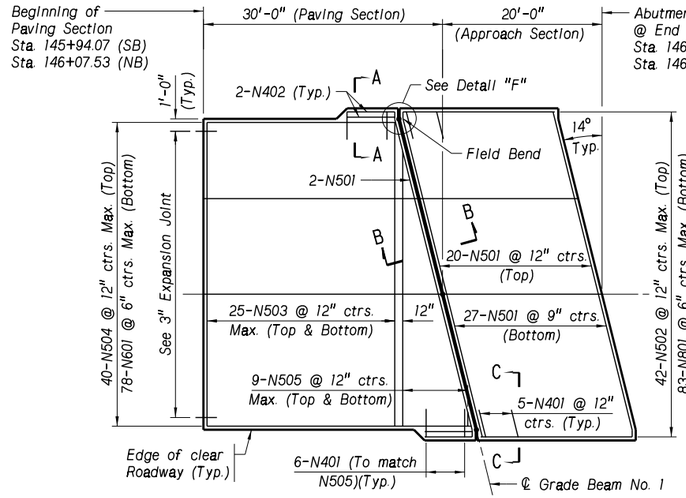

APPROACH SLAB NO. 1

SOUTHBOUND STRUCTURE REINFORCING SHOWN, NORTHBOUND REINFORCING SIMILAR
SEE SHEET 41 OF 48 FOR ADDITONAL NORTHBOUND REINFORCING DETAIL

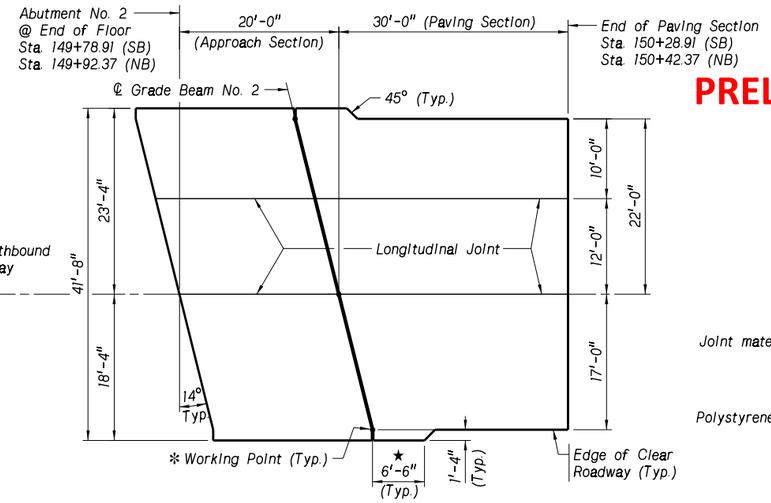

APPROACH SLAB NO. 2

SOUTHBOUND STRUCTURE DIMENSIONS SHOWN,
SEE SHEET 41 OF 48 FOR ADDITIONAL NORTHBOUND APPROACH SECTION DIMENSIONS

GENERAL PLAN OF APPROACH SLABS

Southbound Structure Shown
Not to Scale

PRELIMINARY

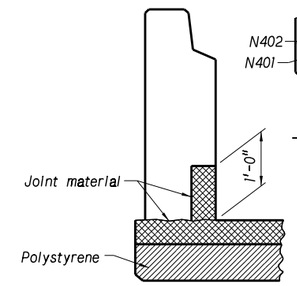

DETAIL "F"

Not to Scale

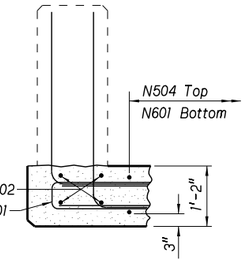

SECTION A-A

Not to Scale
Typical

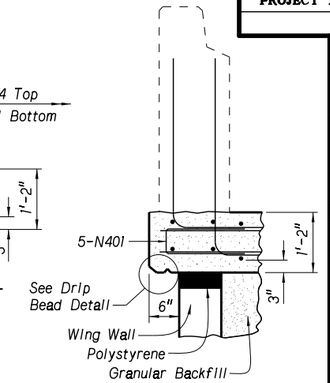

SECTION C-C

Not to Scale

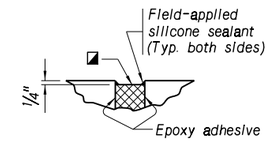

DETAIL "D"

◪ Factory applied & cured silicone facing
Not to Scale

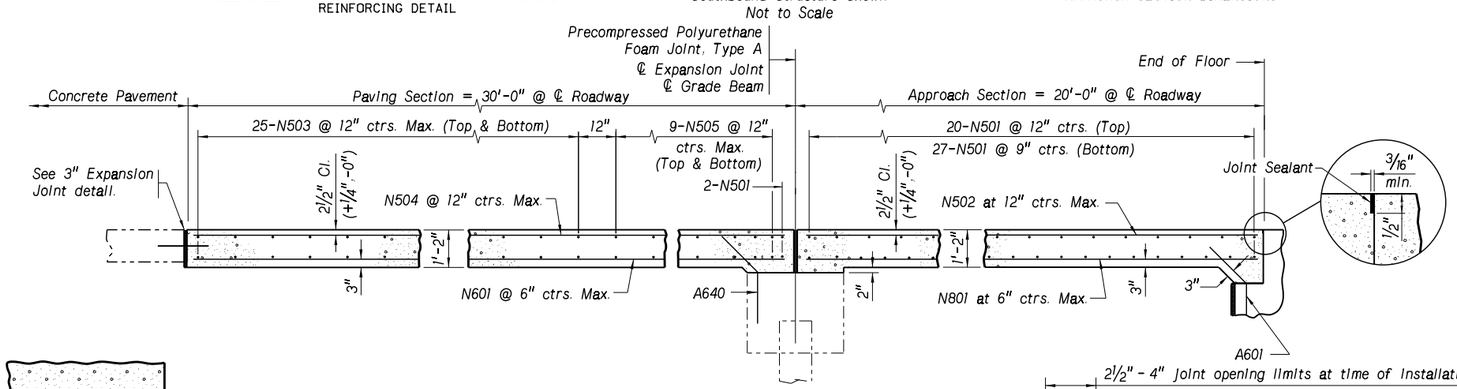

LONGITUDINAL SECTION

Not to Scale

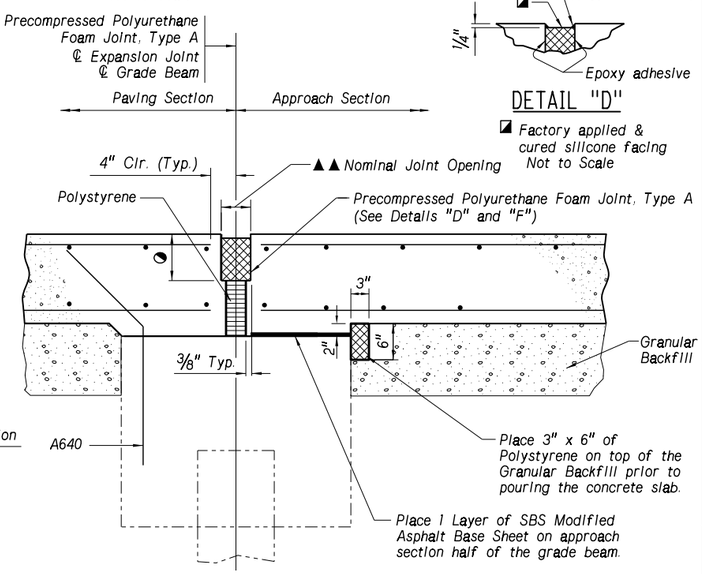

SECTION B-B

Not to Scale

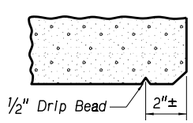

DRIP BEAD DETAIL

Not to Scale

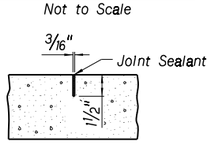

LONGITUDINAL JOINT

Not to Scale

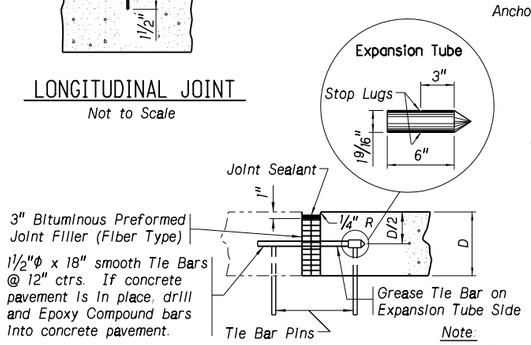

3" EXPANSION JOINT

Not to Scale

Note:
Use D/2 of Roadway Pavement
If less than D/2 of Paving Section.

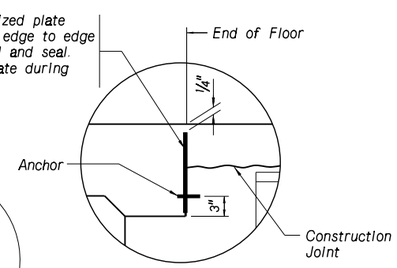

ALTERNATE JOINT DETAIL AT END OF FLOOR

To be used if approach slab is poured continuously with bridge deck.
Not to Scale

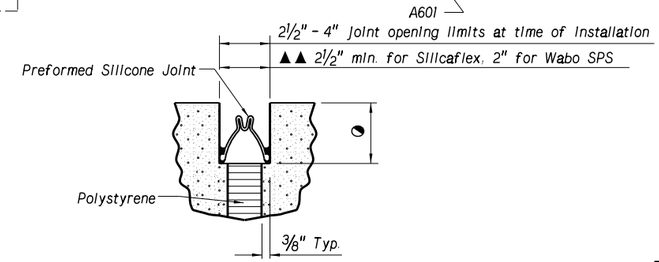

DETAIL FOR PREFORMED SILICONE JOINT AT GRADE BEAM

Not to Scale
(Preformed Silicone Joint Substitution for Precompressed Polyurethane Foam)

PPF ORDER SIZE ▲			
AMBIENT TEMPERATURE RANGE DURING POUR	PPF ▲▲	SILICAFLEX ▲▲	WABO ▲▲
----	3.00"	3.75"	3.50"
----	2.75"	3.50"	3.25"
----	2.50"	3.25"	3.00"
35°-45° (°F)	2.25"	3.00"	2.75"
45°-55° (°F)	2.00"	2.75"	2.50"
55°-75° (°F)	1.75"	2.50"	2.25"
75°-85° (°F)	1.50"	---	2.00"
----	1.25"	---	---

APPROACH SLAB NOTES:

See Standard Specifications for tining and finishing of approach slabs.

Concrete Rail Width = 1'-2". See sheets 41 and 44 of 48 for placement of rail reinforcement.

SBS MODIFIED ASPHALT base sheets and all other miscellaneous items shall be considered subsidiary to the pay item, CONCRETE FOR PAVEMENT APPROACHES CLASS 47BD-4000.

SBS MODIFIED ASPHALT base sheets shall be modified bitumen roofing material, with a minimum thickness of 0.090 inch and a minimum weight of 60 lbs. per 100 sq. feet.

LONGITUDINAL JOINTS shall be 1½" deep and placed in the paving and approach slabs in accordance with section 603.03 paragraph 8 of the Standard Specifications. Contractor shall exercise care not to damage reinforcing steel placed in the top layer of the slabs.

The expansion gap between approach section and paving section shall be cleaned of all foreign matter before the installation of the expansion device or the filler material.

* Working points are located at the intersection of the edge of clear roadway and ℄ Grade Beam.

★ Dimensions measured at edge of clear roadway.

◑ This depth is to be determined by the preformed joint manufacturer.

▲ PPF Joint material, size to be ordered for a 50° opening + ¼".

▲▲ Nominal Joint Opening at time of pour.

PROJECT NUMBER	SHEET NO.
10-2(116)	

C.N. 42103B

STRUCTURE NUMBER
S010 05443 L&R

PROFESSIONAL CIVIL ENGINEER MARK J. TRAYNOWICZ E-8119 STATE OF NEBRASKA

BRIDGE ENGINEER

332'-0" 2-SPAN PRESTRESSED (NU1800) GIRDER BRIDGE
APPROACH SLAB DETAILS

COUNTY BUFFALO
HWY. NO. N-10
REF. POST. 54.43
STA. 148+18.22

LOCATION KEARNEY EAST BYPASS (11th ST. TO 56th ST.)
SKEW 14° LHB
ROADWAY 39'-0"
DESIGN LIVE LOAD HL-93

DESIGNED BY SS
DETAILED BY MR/MGS
CHECKED BY MJA
DATE APRIL 2013

STATE OF NEBRASKA - DEPARTMENT OF ROADS - BRIDGE DIVISION

NDOR Nebraska Department of Road

PROFESSIONAL STRUCTURAL ENGINEER M.J. STEVE SABRA E-8112 STATE OF NEBRASKA

SPECIAL PLAN NO. 1

43 / 48

Computer: DRBRIDGE29 User: dor2062 Date: 02-JUL-2013 11:46 File: c010 05443ar_f.dgn

PRELIMINARY

PROJECT NUMBER	SHEET NO.
10-2(116)	

C.N. 42103B

STRUCTURE NUMBER S010 05443 L&R

PROFESSIONAL CIVIL ENGINEER MARK J. TRAYNOWICZ E-8119 STATE OF NEBRASKA

BRIDGE ENGINEER

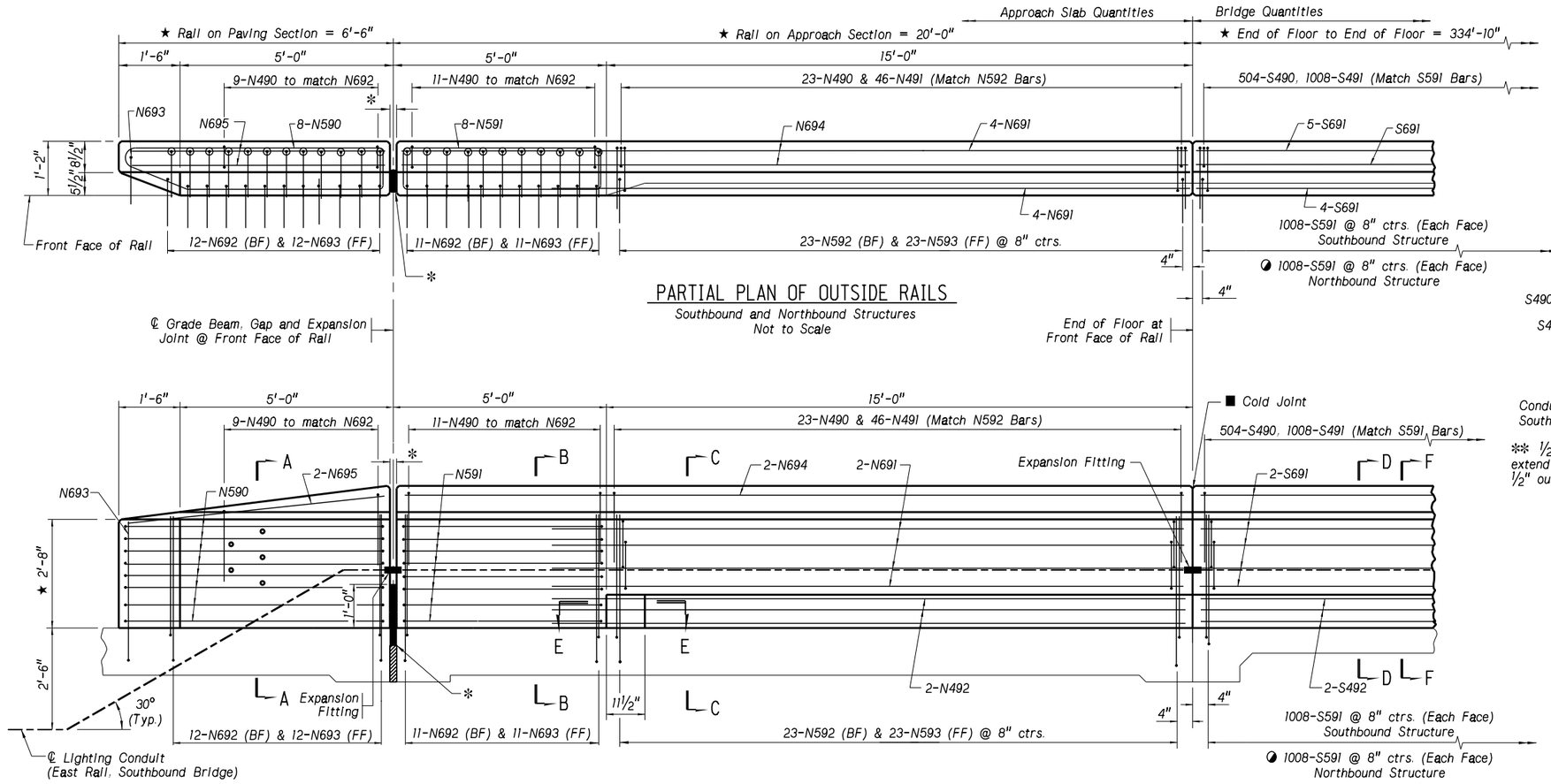

PARTIAL PLAN OF OUTSIDE RAILS

Southbound and Northbound Structures
Not to Scale

PARTIAL ELEVATION OF CONCRETE RAILS

Southbound and Northbound Structures
Not to Scale

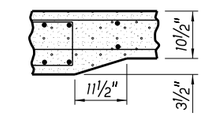

SECTION E-E

Not to Scale

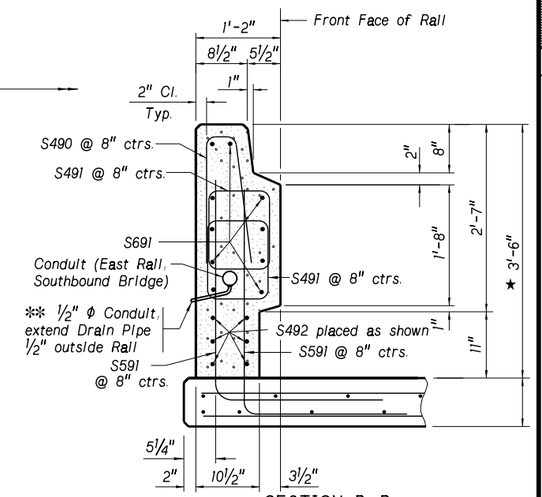

SECTION D-D

Southbound and Northbound Structures
Not to Scale

SECTION C-C

ON APPROACH SECTION
Not to Scale

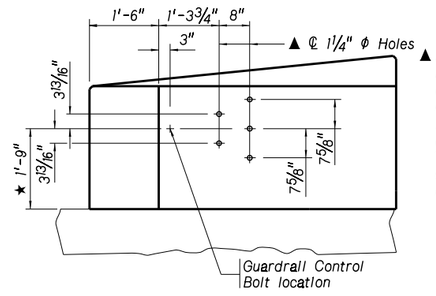

▲ As an alternate method, the contractor shall furnish and cast into the concrete an approved welded assembly consisting of threaded inserts, held accurately to the template of the holes shown. Inserts are to be complete with galvanized plate washers and galvanized ⅞"ϕ x 2" cap screws. The insert assembly shall be a standard product of a reputable manufacturer of such items and be capable of resisting a shear load of 80,000 lbs.

THRIE BEAM TERMINAL CONNECTION DETAIL

Not to Scale

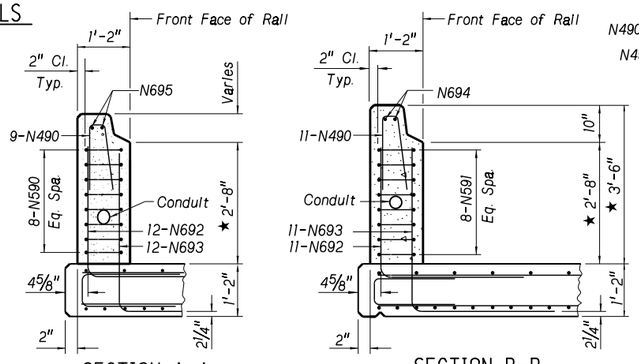

SECTION A-A

Not to Scale

SECTION B-B

Not to Scale

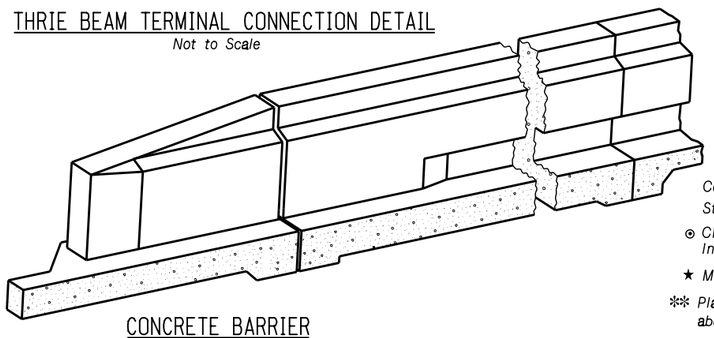

CONCRETE BARRIER

Not to Scale

Concrete Rail will be built plumb.
Steel Forms are required.

⊙ Circled bars indicate placement in the top layer of slab reinforcement.

★ Measured at front face of rail.

** Place at least one drain between abutments and at all low spots.

NOTES

◑ See Plan View of Deck Panels Showing Bridge Rail Locations on sheet 40 of 48 for S591 bar placement.

* Joint material and opening width shall match what is shown on Approach Slab sheet, see sheet 43 of 48.

■ When pouring concrete rails, a mandatory chamfered cold joint must be formed at the end of floor.

For Rail Bill of Bars on Approach Slab see sheet 45 of 48.

For Rail Bill of Bars on Bridge Deck see sheet 42 of 48.

(EF) = Each Face (FF) = Front Face (BF) = Back Face

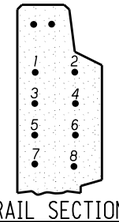

RAIL SECTION

See Lap Detail
Not to Scale

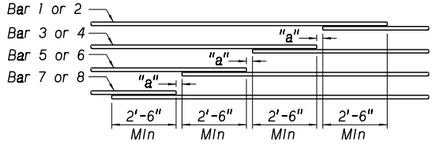

"a" ≥ Zero

LAP DETAIL

Not to Scale

COUNTY BUFFALO
HWY. NO. N-10
REF. POST. 54.43
STA. 148+18.22
DESIGNED BY SS

LOCATION KEARNEY EAST BYPASS (11th ST. TO 56th ST.)
SKEW 14° LHB
ROADWAY 39'-0"
DESIGN LIVE LOAD HL-93
DETAILED BY MR
CHECKED BY MJA

332'-0" 2-SPAN PRESTRESSED (NU1800) GIRDER BRIDGE CONCRETE RAIL ON APPROACH SLABS

DATE APRIL 2013

STATE OF NEBRASKA - DEPARTMENT OF ROADS - BRIDGE DIVISION

NDOR Nebraska Department of Roads

PROFESSIONAL STRUCTURAL ENGINEER M.J. STEVE SABRA E-8112 STATE OF NEBRASKA

SPECIAL PLAN NO.	44 / 48
1	

Computer: DRBRIDGE29 User: dor2062 Date: 02-JUL-2013 11:46 File: c010 05443l&r_f.dgn

BILL OF BARS (SOUTHBOUND BRIDGE)

	MARK	NO.	LENGTH	TYPE	"A"	"B"	"C"	"D"	"E"	"F"	PIN	HOOK	WEIGHT LB
APPROACH SLAB NO. 1	N801	83	19'-4"	STR.									
	N601	78	28'-8" Avg.	STR.									
	N501	49	42'-3"	STR.									
	N502	42	19'-4"	STR.									
	N503	50	38'-6"	STR.									
	N504	40	28'-8" Avg.	STR.									
	N505	18	18'-7" Avg.	STR.									
	N401	22	7'-8"	103	3'-6"	8"	3'-6"				2"		
	N402	8	6'-0"	STR.									
												SUBTOTAL =	LB
RAIL ON APPROACH SLAB NO. 1	N691	16	17'-0"	STR.									
	N692	46	5'-10"	104	2'-11"	2'-11"					4½"		
	N693	48	6'-10"	104	3'-5"	3'-5"					4½"		
	N694	4	19'-7"	STR.									
	N695	4	6'-1"	STR.									
	N590	16	14'-5"	130	4'-8"	10"	6'-1"	5"	1'-6"	1'-5"	2½"	5½"	
	N591	16	11'-11"	107	4'-8"	10"					2½"	5½"	
	N592	46	5'-10"	104	2'-11"	2'-11"					3¾"		
	N593	46	6'-10"	104	3'-5"	3'-5"					3¾"		
	N490	86	4'-4"	131	2'-0"	4"	2'-0"	3"			2"		
	N491	92	4'-7"	107	1'-1"	10"					2"	4½"	
	N492	12	16'-4"	STR.									
												SUBTOTAL =	LB
APPROACH SLAB NO. 2	N801	83	19'-4"	STR.									
	N601	78	28'-8" Avg.	STR.									
	N501	49	42'-3"	STR.									
	N502	42	19'-4"	STR.									
	N503	50	38'-6"	STR.									
	N504	40	28'-8" Avg.	STR.									
	N505	18	18'-7" Avg.	STR.									
	N401	22	7'-8"	103	3'-6"	8"	3'-6"				2"		
	N402	8	6'-0"	STR.									
												SUBTOTAL =	LB
RAIL ON APPROACH SLAB NO. 2	N691	16	17'-0"	STR.									
	N692	46	5'-10"	104	2'-11"	2'-11"					4½"		
	N693	48	6'-10"	104	3'-5"	3'-5"					4½"		
	N694	4	19'-7"	STR.									
	N695	4	6'-1"	STR.									
	N590	16	14'-5"	130	4'-8"	10"	6'-1"	5"	1'-6"	1'-5"	2½"	5½"	
	N591	16	11'-11"	107	4'-8"	10"					2½"	5½"	
	N592	46	5'-10"	104	2'-11"	2'-11"					3¾"		
	N593	46	6'-10"	104	3'-5"	3'-5"					3¾"		
	N490	86	4'-4"	131	2'-0"	4"	2'-0"	3"			2"		
	N491	92	4'-7"	107	1'-1"	10"					2"	4½"	
	N492	12	16'-4"	STR.									
												SUBTOTAL =	LB
												TOTAL =	LB

BILL OF BARS (NORTHBOUND BRIDGE)

	MARK	NO.	LENGTH	TYPE	"A"	"B"	"C"	"D"	"E"	"F"	PIN	HOOK	WEIGHT LB
APPROACH SLAB NO. 1	N801	83	19'-4"	STR.									4284
	N601	78	28'-8" Avg.	STR.									3358
	N501	49	42'-3"	STR.									2159
	N502	42	19'-4"	STR.									847
	N503	50	38'-6"	STR.									2008
	N504	40	28'-8" Avg.	STR.									1196
	N505	18	18'-7" Avg.	STR.									349
	N506	5	10'-0"	103	4'-0"	2'-0"	4'-0"				2½"		52
	N507	10	4'-0"	STR.									42
	N401	22	7'-8"	103	3'-6"	8"	3'-6"				2"		113
	N402	8	6'-0"	STR.									32
												SUBTOTAL =	14440 LB
RAIL ON APPROACH SLAB NO. 1	N691	16	17'-0"	STR.									409
	N692	46	5'-10"	104	2'-11"	2'-11"					4½"		403
	N693	48	6'-10"	104	3'-5"	3'-5"					4½"		493
	N694	4	19'-7"	STR.									118
	N695	4	6'-1"	STR.									37
	N590	16	14'-5"	130	4'-8"	10"	6'-1"	5"	1'-6"	1'-5"	2½"	5½"	241
	N591	16	11'-11"	107	4'-8"	10"					2½"	5½"	199
	N592	46	5'-10"	104	2'-11"	2'-11"					3¾"		280
	N593	46	6'-10"	104	3'-5"	3'-5"					3¾"		328
	N490	86	4'-4"	131	2'-0"	4"	2'-0"	3"			2"		249
	N491	92	4'-7"	107	1'-1"	10"					2"	4½"	282
	N492	12	16'-4"	STR.									131
												SUBTOTAL =	3170 LB
APPROACH SLAB NO. 2	N801	83	19'-4"	STR.									4284
	N601	78	28'-8" Avg.	STR.									3358
	N501	49	42'-3"	STR.									2159
	N502	42	19'-4"	STR.									847
	N503	50	38'-6"	STR.									2008
	N504	40	28'-8" Avg.	STR.									1196
	N505	18	18'-7" Avg.	STR.									349
	N506	5	10'-0"	103	4'-0"	2'-0"	4'-0"				2½"		52
	N507	10	4'-0"	STR.									42
	N401	22	7'-8"	103	3'-6"	8"	3'-6"				2"		113
	N402	8	6'-0"	STR.									32
												SUBTOTAL =	14440 LB
RAIL ON APPROACH SLAB NO. 2	N691	16	17'-0"	STR.									409
	N692	46	5'-10"	104	2'-11"	2'-11"					4½"		403
	N693	48	6'-10"	104	3'-5"	3'-5"					4½"		493
	N694	4	19'-7"	STR.									118
	N695	4	6'-1"	STR.									37
	N590	16	14'-5"	130	4'-8"	10"	6'-1"	5"	1'-6"	1'-5"	2½"	5½"	241
	N591	16	11'-11"	107	4'-8"	10"					2½"	5½"	199
	N592	46	5'-10"	104	2'-11"	2'-11"					3¾"		280
	N593	46	6'-10"	104	3'-5"	3'-5"					3¾"		328
	N490	86	4'-4"	131	2'-0"	4"	2'-0"	3"			2"		249
	N491	92	4'-7"	107	1'-1"	10"					2"	4½"	282
	N492	12	16'-4"	STR.									131
												SUBTOTAL =	3170 LB
												TOTAL =	35220 LB

PRELIMINARY

APP. NO. 1 BAR SETS (SB)

MARK	MAX. LENGTH	MIN. LENGTH	NO. OF SETS	BARS PER SET
N601	33'-6"	23'-10"	1	78
N504	33'-6"	23'-10"	1	40
N505	34'-8"	2'-6"	2	9

APP. NO. 2 BAR SETS (SB)

MARK	MAX. LENGTH	MIN. LENGTH	NO. OF SETS	BARS PER SET
N601	33'-6"	23'-10"	1	78
N504	33'-6"	23'-10"	1	40
N505	34'-8"	2'-6"	2	9

APP. NO. 1 BAR SETS (NB)

MARK	MAX. LENGTH	MIN. LENGTH	NO. OF SETS	BARS PER SET
N601	33'-6"	23'-10"	1	78
N504	33'-6"	23'-10"	1	40
N505	34'-8"	2'-6"	2	9

APP. NO. 2 BAR SETS (NB)

MARK	MAX. LENGTH	MIN. LENGTH	NO. OF SETS	BARS PER SET
N601	33'-6"	23'-10"	1	78
N504	33'-6"	23'-10"	1	40
N505	34'-8"	2'-6"	2	9

NOTE:
FOR BENDING DIAGRAMS, HOOK LENGTHS, & PIN DIAMETERS SEE SHEET 42 OF 48.

THE NUMBER OF LAP SPLICES ARE CALCULATED BASED ON 60'-0" LENGTHS OF REINFORCING STEEL BARS.
SPLICES ON BARS SHORTER THAN 60'-0" WILL REQUIRE ADDITIONAL LAP SPLICES AT NO ADDITIONAL EXPENSE TO NDOR.

PROJECT NUMBER 10-2(116) | SHEET NO.
C.N. 42103B
STRUCTURE NUMBER S010 05443 L&R

PROFESSIONAL CIVIL ENGINEER MARK J. TRAYNOWICZ E-8119 STATE OF NEBRASKA

BRIDGE ENGINEER

332'-0" 2-SPAN PRESTRESSED (NU1800) GIRDER BRIDGE
APPROACH SLAB BILL OF BARS

COUNTY BUFFALO
HWY. NO. N-10
REF. POST. 54.43
STA. 148+18.22
LOCATION KEARNEY EAST BYPASS 56th ST.)
SKEW 14° LHB (11th ST. TO
ROADWAY 39'-0"
DESIGN LIVE LOAD HL-93
DATE APRIL 2013
DESIGNED BY SS
DETAILED BY MR
CHECKED BY MJA

STATE OF NEBRASKA - DEPARTMENT OF ROADS - BRIDGE DIVISION

NDOR Nebraska Department of Road

PROFESSIONAL STRUCTURAL ENGINEER M.J. STEVE SABRA E-8112 STATE OF NEBRASKA

SPECIAL PLAN NO. 1

File: c010 05443l&r_f.dgn Date: 02-JUL-2013 11:47 User: dor2062 Computer: DRBRIDGE29

PRELIMINARY

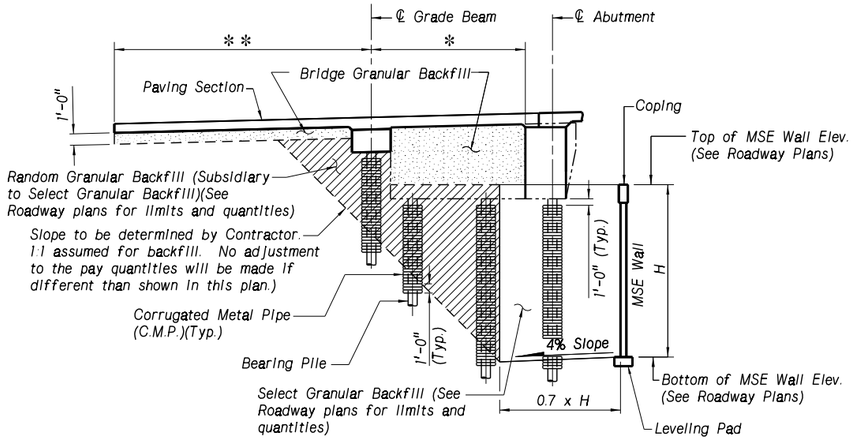

SECTION A-A

The pay limit quantity for Granular Backfill has been established using the following equation:

$$\text{Quantity } (yd^3) = \frac{\text{Area} \times L1}{27}$$

* The Granular Backfill in this area shall be placed in 8 inch layers and compacted by a single pass of a walk-behind, lightweight (approx. 100 lbs.) mechanical tamper, roller, or vibratory compactor. There is no density requirement. Heavy compaction equipment shall not be used in this area. Flooding the granular backfill with water is not allowed.

* * The Granular Backfill in this area shall be compacted in accordance with the Standard Specifications.

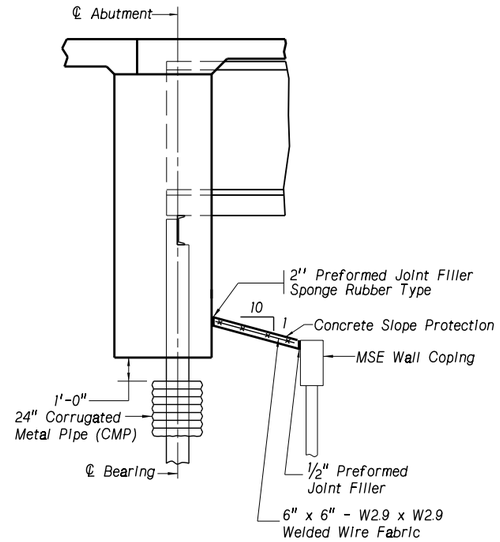

SECTION B-B

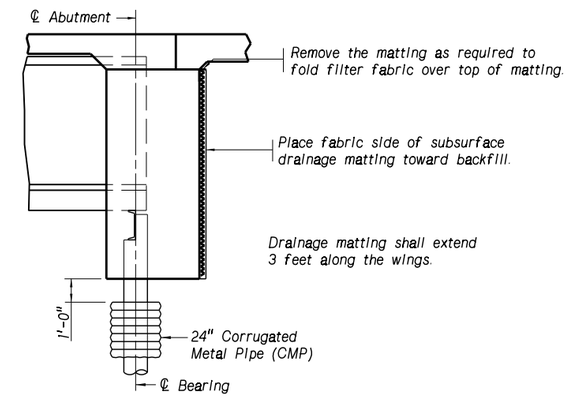

DRAINAGE DETAIL

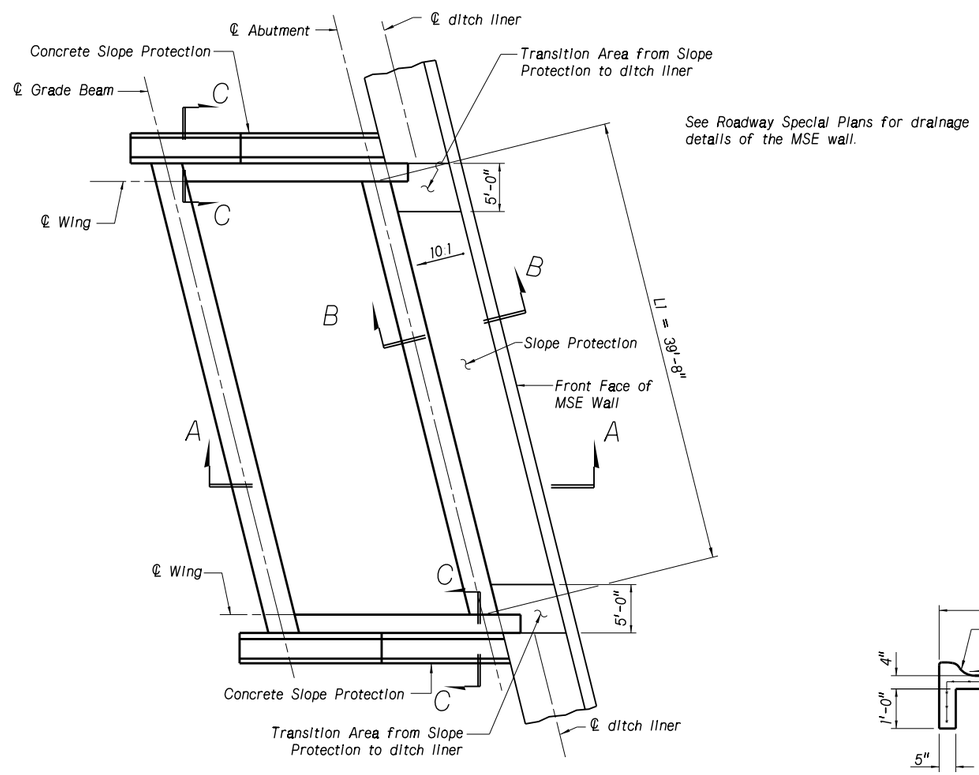

PLAN OF GRANULAR BACKFILL, CONCRETE SLOPE PROTECTION AND MSE WALL

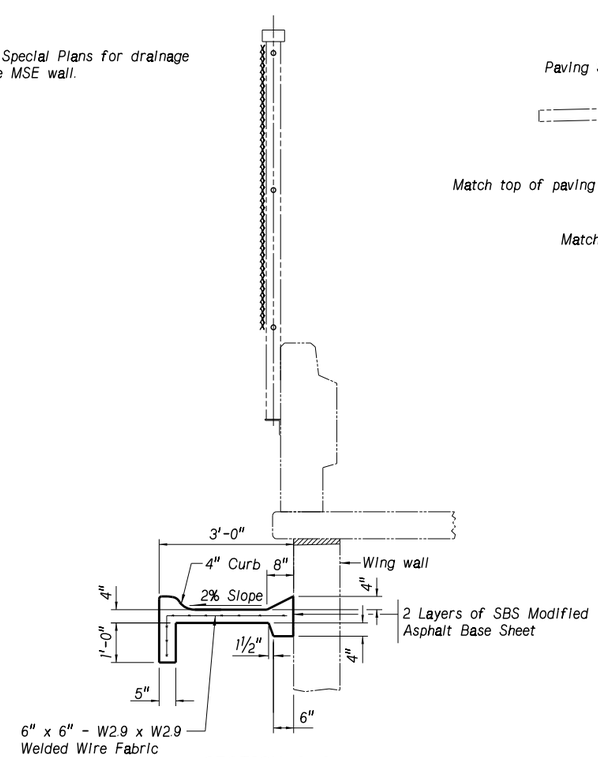

SECTION C-C

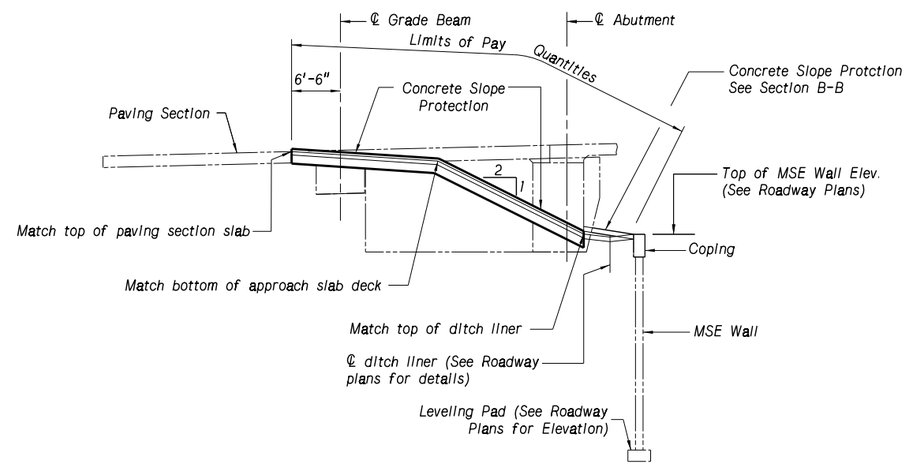

ELEVATION OF CONCRETE SLOPE PROTECTION

(Abutment No. 1 and 2, East & West Wings)
(Northbound and Southbound Bridges)
Not to Scale

PROJECT NUMBER	SHEET NO.
10-2(116)	

C.N. 42103B

STRUCTURE NUMBER S010 05443 L&R

PROFESSIONAL CIVIL ENGINEER MARK J. TRAYNOWICZ E-8119 STATE OF NEBRASKA

BRIDGE ENGINEER

332'-0" 2-SPAN PRESTRESSED (NU1800) GIRDER BRIDGE
GRANULAR BACKFILL AND DRAINAGE DETAILS

COUNTY BUFFALO
HWY. NO. N-10
REF. POST.
STA. 148+18.22

LOCATION KEARNEY EAST BYPASS
SKEW 14° LHB (11th ST. TO 56th ST.)
ROADWAY 39'-0"
DESIGN LIVE LOAD HL-93

DATE APRIL 2013

DESIGNED BY SS
DETAILED BY MR
CHECKED BY MJA

STATE OF NEBRASKA - DEPARTMENT OF ROADS - BRIDGE DIVISION

NDOR Nebraska Department of Roads

PROFESSIONAL STRUCTURAL ENGINEER M.J. STEVE SABRA E-8112 STATE OF NEBRASKA

SPECIAL PLAN NO.	
1	48/48

File: c010 05443l&r_f.dgn Date: 02-JUL-2013 11:47 User: dor2062 Computer: DRBRIDGE29